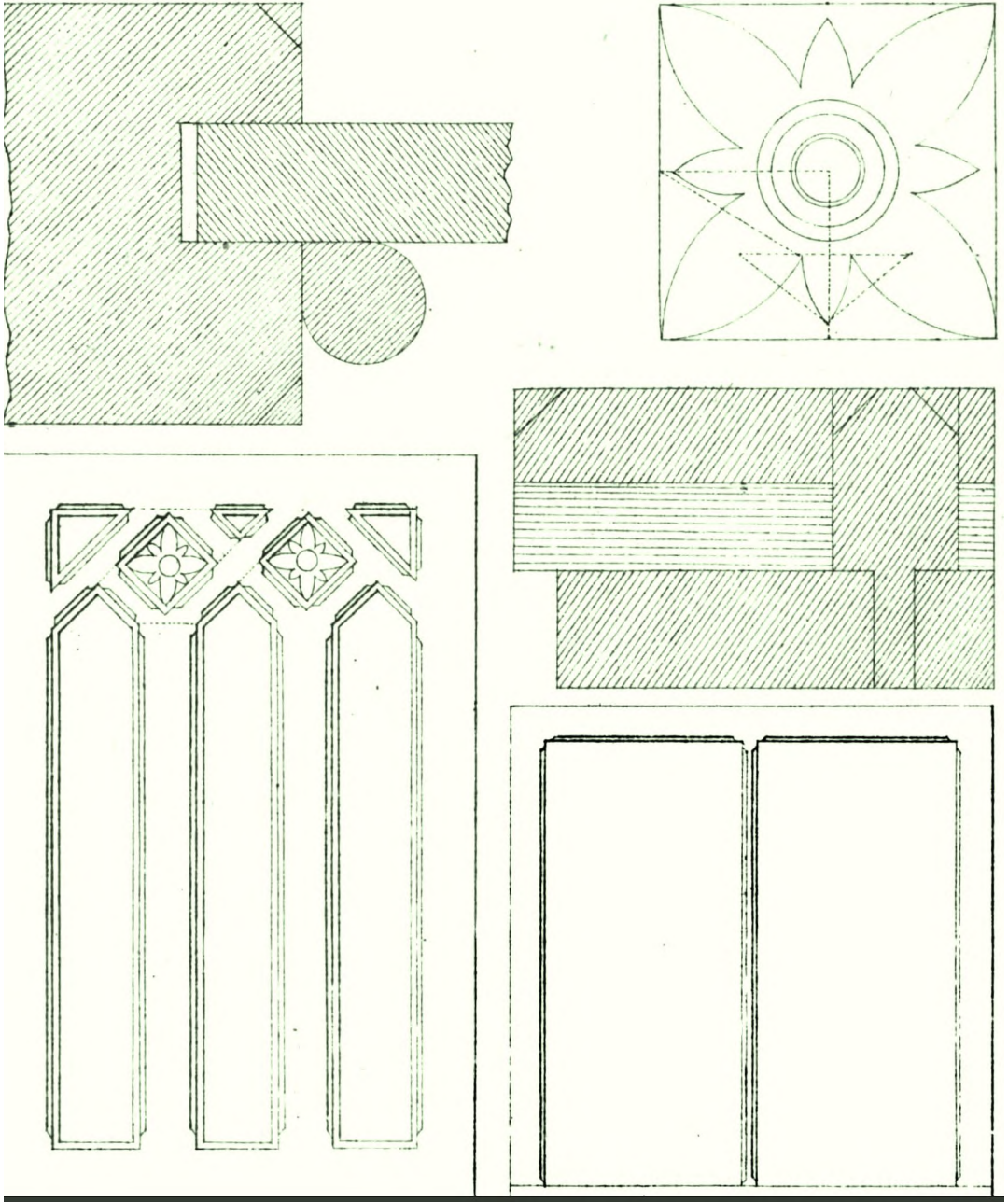

The New Carpenter's and Builder's Assistant, and Wood ...

Lucius D. Gould

Digitized by Google

HARVARD UNIVERSITY

VE RI TAS

Library of the
School of Architecture

Digitized by Google

Digitized by Google

Digitized by Google

Digitized by Google

Digitized by Google

THE NEW

CARPENTER'S AND BUILDER'S ASSISTANT,

AND

WOOD WORKER'S GUIDE.

REVISED AND ENLARGED

BY

LUCIUS D. GOULD,

ARCHITECT AND PRACTICAL BUILDER.

NEW YORK:
BICKNELL & COMSTOCK,
ARCHITECTURAL DESIGNERS AND PUBLISHERS.
1879.

Digitized by Google

Reserve fund
DEPARTMENT OF ARCHITECTURE
HARVARD UNIVERSITY
April 1942
2.50
35587

COPYRIGHT, 1879,
LUCIUS D. GOULD.

TH
Digitized by Google

PREFACE.

The experience of workmen generally, will testify that books have, as yet, furnished them but small assistance in the theory and art of construction. The object of the author in publishing this work, is to furnish them with rules for finding sections of pieces placed in any position; for cutting every description of joints; for finding the form of the raking mould at any point divergent from the straight line; for springing and bending mouldings; for mitering circular mouldings, and planes oblique to the base at any angle.

Together with these rules, the author presents tables of the weight, and cohesive strength, of the different materials used in the construction of buildings, as well as the weight required to crush said materials; a treatise on the adhesion of nails, screws, iron pins and glue; also an easy system of stair-railing for straight and platform stairs. To all this is added a geometrical and mathematical demonstration for finding the circumference, and squaring the circle.

There can be but little doubt that a work of this kind is needed by Architects and Builders, and especially by Carpenters and Wood-workers, who are inexperienced in the different kinds of labor which they are called upon to perform.

It is but due to acknowledge that we have consulted the valuable works of Thomas Tredgold for the articles on the strength and weight of materials. Also Mr. Nicholson, of London, for the glossary of technical terms.

Digitized by Google

Digitized by Google

CONTENTS.

	PAGE
Plate 1.—To Form an Ellipse.	6
To Draw a Polygon.	
To Form False Ellipse.	
Table showing Length of Brace.	7
Plate 2.—The Carpenter's Square.	8
Practical Method of Finding Contents in Cubic Feet.	9
Plate 3.—Timber Foundation for a Frame Building.	10
Superficial Contents.	11
Plate 4.—Balloon Frames.	12
Construction of Roofs.	13
Plate 5.—Butting and Jointing Timbers.	14
Plate 6.—Framing.	16
Roof Coverings.	17
Plate 7.—Figure 1.—Hip and Jack Rafters.	18
Figure 2.—Circular Stairs.	
Figure 3.—Roof Framing Span 40 to 70 ft.	
Long Measure.	19
Plate 8.—Roof with Internal Angles.	20
Square Measure.	21
Plate 9.—Plan and Elevation of Obtuse and Acute Angled Building, Projection of Rafters and Braces.	22
Tables.—Strength of Materials.	23
Plate 10.—Mitre-Box.—Octagonal and Hexagonal Roofs.	24
Posts.	25
Plate 11.—Spires.	26
Weights of Materials.	27
Plate 12.—Curve of Sprung Mouldings.	28
Adhesion of Nails.	29, 31
Plate 13.—Bevels: Acute and Obtuse Angles.	30
Plate 14.—Area of a Circle and Contents of a Globe.	32
Adhesion of Screws and Iron Pins, and length of Iron Nails.	33
Plate 15.—Brackets.	34
Adhesion of Glue.	35
Plate 16.—The Raking Mould.	36
Plate 17.—Rule for finding Mitre Lines.	38
Protection against Rust.	39
Plate 18.—Circular and Square Pans.	40
Properties of Various Woods.	41
How to Measure Grain Bins.	41
Plate 19.—Circular Desk and Seat.	42
Miscellaneous Notes and Rules.	43, 45
Plate 20.—Angle of Rafter for French Roofs.	44
Plate 21.—Mitring of Circular Mouldings.	46
Terms used in Carpentry.	47—67
Plate 22.—Sash Tools.	48
Plate 23.—Corinthian Truss.	50
Plate 24.—Platform Staircase.	52
Plate 25.—Hand Railing.	54
Plate 26.—Groin Arches.	56
Plate 27.	58
Squaring the Circle	68, 69

Digitized by Google

PROBLEMS.

PLATE 1.

To form an ellipse with a thread or string.

At Fig. 1, draw the major and minor axes, A B and C D. To find the points for the pins, to describe the ellipse: from the point C as centre, with E B as radius, describe arcs cutting the major axis at 2 and 3, the points required; around the pins and the point C place a cord; with the pencil placed at the point C, describe the ellipse required.—Care should be taken to keep the cord at an even tension.

To draw a polygon of any number of sides.

To form a polygon of five sides.—From the point A, Fig. 2, as centre, with the given side A B as radius, describe a semi-circle, which divide into five equal parts; through the points of division, draw A 2, A 3 and A 4, indefinitely; parallel to A 3 and A 4, draw B C and 2 D; join C D, which completes the polygon required.

To form the false ellipse.

FIGURE 3. Draw the major and minor axes, A B and C D; join B C, and divide into three equal parts; draw N E at right angles to C B: from the point E as centre, with E C as radius, describe the arc R N: from the point S as centre, with S B as radius, describe the arc N P. The opposite sides are found in the same manner.

Figures 4, 5 and 6, are simple geometrical operations an inspection of which is sufficient for their comprehension.

Digitized by Google

Fig. 1

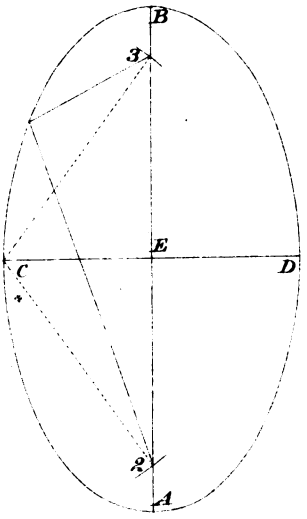

Fig. 2

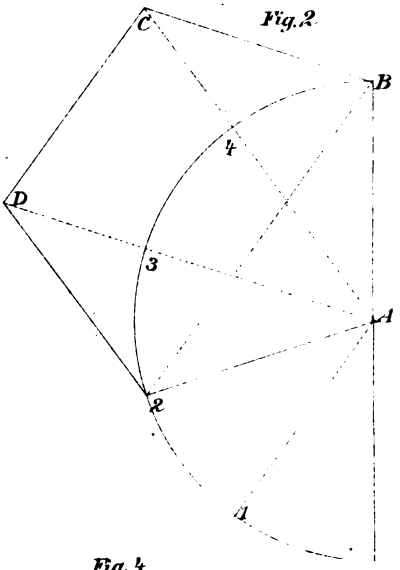

Fig. 3

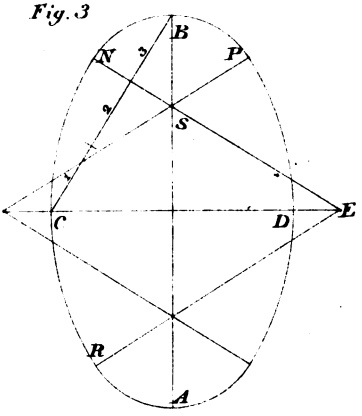

Fig. 4

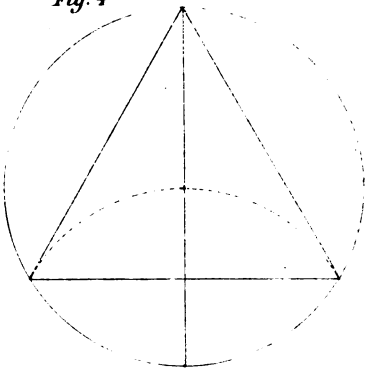

Fig. 5

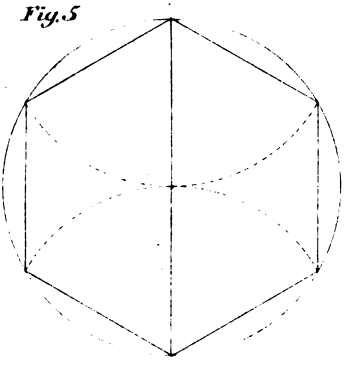

Fig. 6

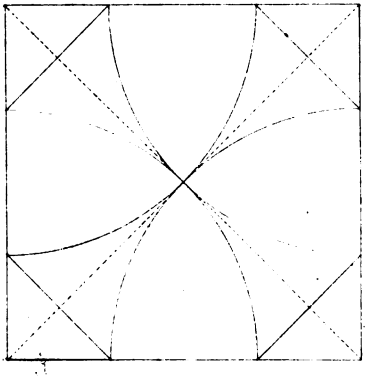

Digitized by Google

Digitized by Google

TABLE

Showing the length of brace when the run is given, also the length of run when the brace is given.

RUN.	BRACE.	BRACE.	RUN.
2 ft. × 2 ft.	2.8248	2 ft.	1.4142 × 1.4142
2 ft. 3 in. × 2 ft. 3 in.	3.1819	2 ft. 3 in.	1.5909 × 1.5909
2 ft. 6 in. × 2 ft. 6 in.	3.5749	2 ft. 6 in.	1.7879 × 1.7879
2 ft. 9 in. × 2 ft. 9 in.	3.8903	2 ft. 9 in.	1.9451 × 1.9451
3 ft. × 3 ft.	4.2426	3 ft.	2.1213 × 2.1213
3 ft. 3 in. × 3 ft. 3 in.	4.5961	3 ft. 3 in.	2.2980 × 2.2980
3 ft. 6 in. × 3 ft. 6 in.	4.9497	3 ft. 6 in.	2.4748 × 2.4748
3 ft. 9 in. × 3 ft. 9 in.	5.3141	3 ft. 9 in.	2.6570 × 2.6570
4 ft. × 4 ft.	5.6568	4 ft.	2.8784 × 2.8784
4 ft. 3 in. × 4 ft. 3 in.	6.0103	4 ft. 3 in.	3.0051 × 3.0051
4 ft. 6 in. × 4 ft. 6 in.	6.3639	4 ft. 6 in.	3.1819 × 3.1819
4 ft. 9 in. × 4 ft. 9 in.	6.7162	4 ft. in.	3.3581 × 3.3581
5 ft. × 5 ft.	7.0705	5 ft.	3.5357 × 3.5357
5 ft. 3 in. × 5 ft. 3 in.	7.4246	5 ft. 3 in.	3.7123 × 3.7123
5 ft. 6 in. × 5 ft. 6 in.	7.7781	5 ft. 6 in.	3.8890 × 3.8890
5 ft. 9 in. × 5 ft. 9 in.	8.1317	5 ft. 9 in.	4.0658 × 4.0658
6 ft. × 6 ft.	8.4852	6 ft.	4.2426 × 4.2426
6 ft. 3 in. × 6 ft. 3 in.	8.8388	6 ft. 3 in.	4.4194 × 4.4194
6 ft. 6 in. × 6 ft. 6 in.	9.1923	6 ft. 6 in.	4.5961 × 4.5961
6 ft. 9 in. × 6 ft. 9 in.	9.5459	6 ft. 9 in.	4.7729 × 4.7729
7 ft. × 7 ft.	9.9000	7 ft.	4.9500 × 4.9500
7 ft. 3 in. × 7 ft. 3 in.	10.2412	7 ft. 3 in.	5.1206 × 5.1206
7 ft. 6 in. × 7 ft. 6 in.	10.8863	7 ft. 6 in.	5.4431 × 5.4431
7 ft. 9 in. × 7 ft. 9 in.	10.9181	7 ft. 9 in.	5.4590 × 5.4590
8 ft. × 8 ft.	11.3132	8 ft.	5.6566 × 5.6566

To reduce the decimals to inches, multiply by 12 for inches, the product by 8 for eighths, the eighths by 2 for sixteenths. *Example:*

5.6566=5 ft. $7\frac{7}{8}$ in.

12

7.8792

8

7.0336

2

.0672

PLATE 2.

THE *Carpenter's Square* is an instrument in general use, and is as important and valuable to the workman, as the clock is to the time-keeper, or the compass to the mariner. The square consists of a blade and tongue, placed at right angles to each other. The blade is two feet long; the tongue twelve to sixteen inches long, divided into inches and eighths of an inch. The following rules will demonstrate a few of the uses to which the square may be applied.

FIGURE 1.—Exhibits the use of the square to divide a board into any number of equal parts. For example, to divide a board into four equal parts, place the points of the blade on the edges of the piece, then 6, 12 and 18, will be the points of division. If five pieces are required, the figures 5, 10, 15 and 20, give the points of division.

FIGURE 2.—Exhibits the application of the square to find the points for eight-squaring timber. Also to cut a piece to fit any angle, by extending the line of the blade to A: place the square on the piece, transfer the distance extended, and draw the line A B, the angle required.

FIGURE 3.—Exhibits the application of the square to find the angles of the octagonal figure.

To find the cuts in the mitre-box.—At Figure 4, place the square at equal distances from the heel, on the line A B. To prove the truth of the lines, reverse the bevel. To find the perpendicular and horizontal cuts of rafters with the square, take half the width of the building for the run, on the blade, and the rise on the tongue.

FIGURE 5.—Exhibits two rules for finding the backing of hip-rafters; one with the square, as follows: Place the square on the line D E, with the height H B on the tongue, and the length A B on the blade; then the direction of the tongue gives the angle required. This rule gives the angle to bevel the hip-rafter for a right-angled plan where the pitches are the same, *and no other*—which makes it circumstantial, and of little or no value to the workman—while the other applies to right, obtuse, and acute, angles where the pitches are the same, as follows: From the point D as centre, describe an arc from the line L K; tangent to the arc, draw the dotted line parallel to D A, cutting the line A H at I; draw I J parallel to A B: then the line I J gives the distance to gauge the rafter for the backing, as shown at section G.

Digitized by Google

Fig 1.

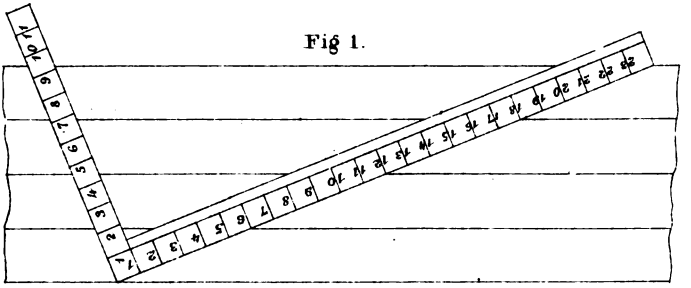

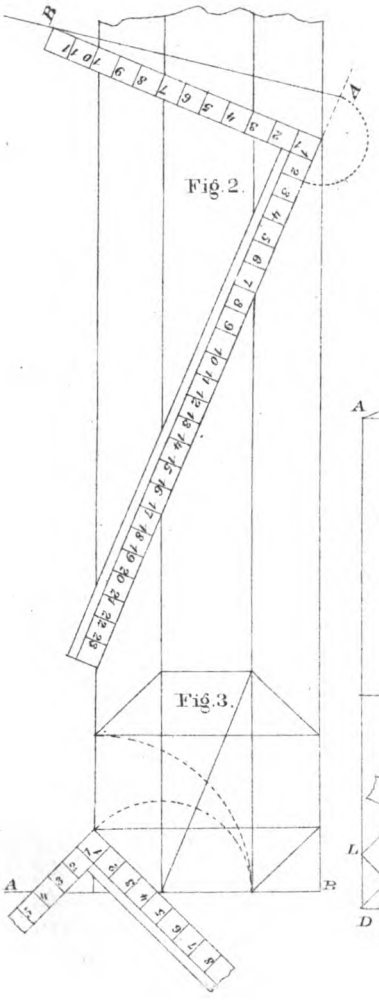

Fig. 2.

Fig. 3.

Fig. 4.

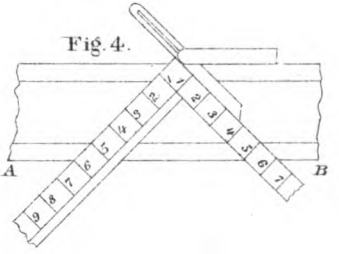

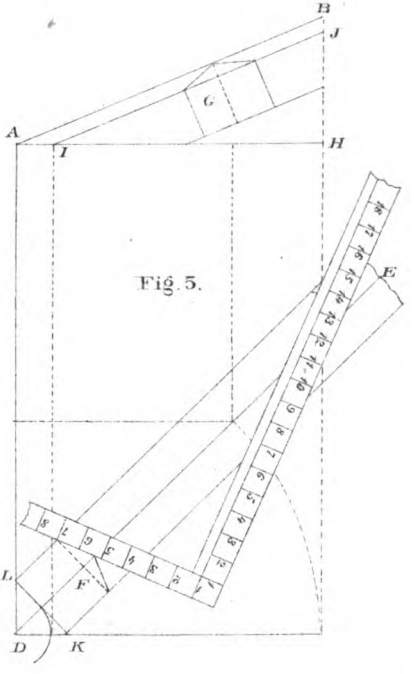

Fig. 5.

Digitized by Google

Digitized by Google

A PRACTICAL METHOD

OF FINDING THE NUMBER OF CUBIC FEET AND INCHES CONTAINED IN TIMBER AND OTHER MATERIALS.

If the length be given in feet and inches, and the section, or end, in inches, multiply the sides of the section by each other, and divide by 12. Also divide the length by 12: multiply these two dimensions by each other duodecimally, and the product will be the contents in cubic feet and inches.

Example.—Find the number of cubic feet in a piece of timber 28 feet long, 11 inches wide, and 3 inches thick.

```
 in.                          ft.
 11 }                        12)28, the length.
  3 } the sides.                 ----
----                   Multiply  2·4
12)33                        By  2·9
----                             ----
  2·9                             4·8
                                 1·9·0
                                 ----
                                 6·5 gives 6 ft. 5 in.,
                                       the solidity.
```

Example 2.—Find the cubic contents of 4 quarters, or studs, each 12 feet 6 inches long, and 6 inches wide, by 2½ inches thick.

```
 2½ }                        12·6, the length.
 6  } the sides.                4, the number of pieces.
----                          ----
12)15                       12)50·0
----                          ----
  1·3                   Multiply  4·2
                             By  1·3
                                 ----
                                 4·2
                                 1·2·6
                                 -----
                                 5·4·6, gives 5 ft. 4 in. and
                                       6 parts, the solidity.
```

Digitized by Google

PLATE 3.

Shows a timber foundation for a frame building, with two side elevations, framed in the usual manner for good houses.—The object of this and the following Plates, is first to give the inexperienced workman the names used among carpenters and joiners, of the different pieces of timber used in framing, and where they are placed; also to show the method of constructing what is called a *balloon frame.*

FIGURE 1.—Shows a timber plan of foundation supported by brick or stone walls. The outside timbers are called *sills;* and, if there are no openings, all other timbers are called *beams;* but when there are openings for chimneys or stair-ways, the workman will be required to mortise and tenon the timbers together, as shown on the plan. The first piece of timber to prepare will be the *trimmer*, shown at A, which is tenoned into the *trimmer-beams*, shown at B B. The short beams tenoned into the *trimmer* are called *tail-beams.* Figs. 2 and 3 are the front and a portion of the side elevation of the frame standing on the foundation, showing the posts, beams, enter-ties, plates, rafters and braces, in their proper places. The timbers shown at A A, Fig. 2, are called *frame-beams*; D D, *corner posts*, and C C, *rafters.* At Fig. 3, A shows what should be called an *intermediate post*; the pieces of timber called *enter-ties*, are shown at E E; the piece of timber supporting the rafters at C, represents the *plate*, and B B the *sills;* the oblique pieces of timber shown on the elevations, are called *braces;* the timbers shown on each side of the openings, are called *joists*, and termed door and window joist; those placed between doors and windows, are called intermediate joists, or *furrings;* all joists cut under or over the braces are called *cripples;* a piece of timber placed on piers for the purpose of supporting other timbers or partitions, are called *summers;* a piece of timber placed on a truss-frame, for the purpose of supporting the common rafters, is called a *purlin.*

Digitized by Google

Fig. 1.

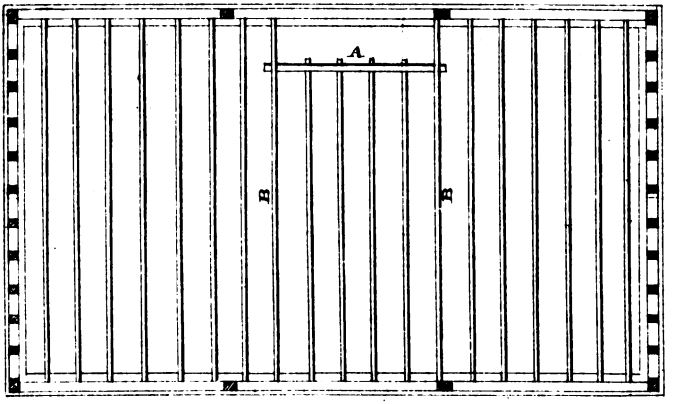

Fig. 2.

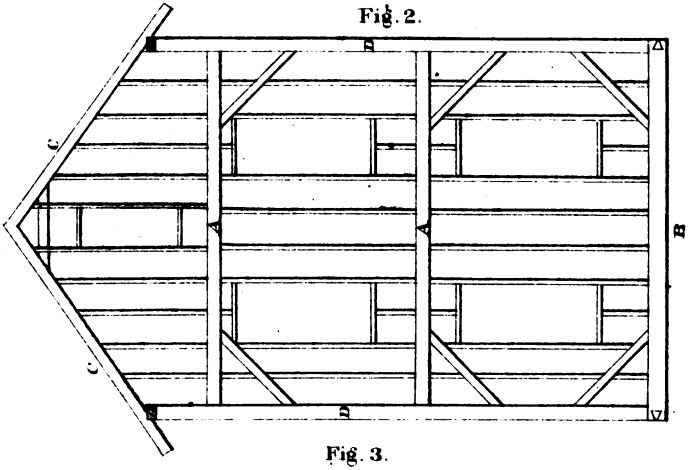

Fig. 3.

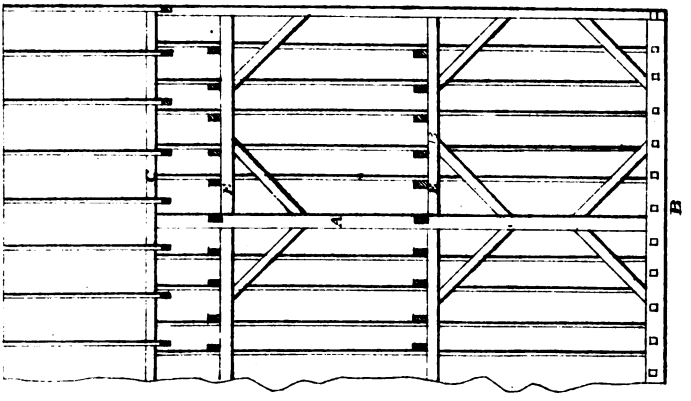

Digitized by Google

Digitized by Google

A PRACTICAL METHOD

Of finding the superficial contents of boards and timber. For boards, multiply the width, in inches, by the length, in feet, and divide by 12.

Example.—Find the number of feet in a board 1 inch thick, 9 inches wide and 13 feet long.

13
9
12)117
9·9=9 feet 9 inches.

Example 2d.—Find the number of feet in a piece of timber 3x10 inches, 21 feet long.

10 inches wide.
3 " thick.
12)30
2·6 inches in each foot in length.
21 feet long.
42
10·6
52·6 gives 52 feet 6 inches, the number of feet in the piece.

Digitized by Google

PLATE 4.

Shows the method of constructing what is termed a balloon frame.

Fig. 1 shows the timber plan; Figs. 2 and 3, the front and side elevations. The foundation timbers should be of white pine; all other timbers, of spruce or Eastern pine. All the tools the workman requires to construct a frame of this kind, are a saw, hammer and chisel. The side-sills should be 4x4 inches; front and rear-sills, four inches thick; beams 2x8 or ten inches, according to their length and the load they are required to carry. Corner post 4x4 inches; door and window joists, 3x4 inches; all other intermediate joists, 2x4 inches; plates, 4x4 inches; rafters, 3x5 inches. The two outside beams, in second story, are spiked to the joists; those resting on the plates are spiked to the rafters. The enter-ties require to be 1½ x4 inches let into the joists to support second story beams. Each tier of beams should have one or two courses of bridging. When the frame is completed and sheathed with one inch worked boards, placed diagonally and securely nailed to every joist, it will be quite as substantial and safe as a frame made in the usual manner.

Digitized by Google

Fig. 1.

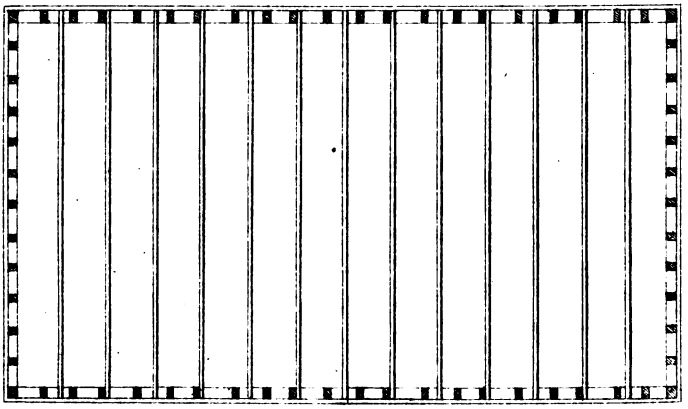

Fig. 2.

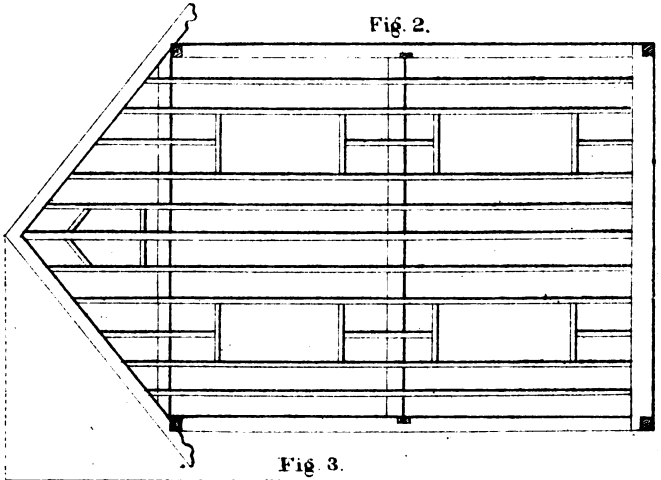

Fig. 3.

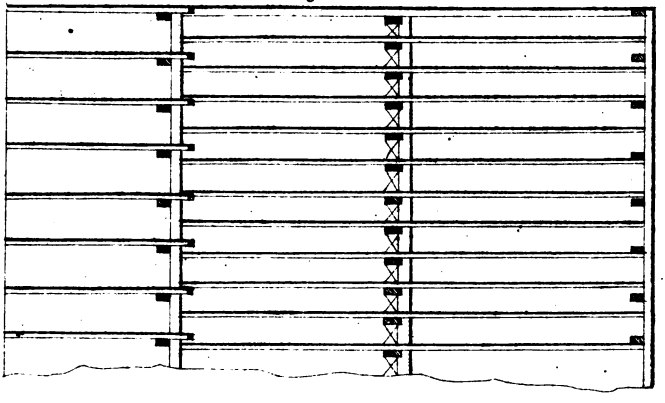

Digitized by Google

Digitized by Google

CONSTRUCTION OF ROOFS.

In old Gothic buildings, the roof always had a high pitch, its outline formed a striking feature, and in general had a graceful proportion with the magnitude of the building; sometimes, however, it presented a plain surface of too great extent, as the roof of Westminster Hall. Though a high roof is in perfect unison with the aspiring and pyramidal character of Gothic architecture, in the more chaste and classic style of the Greek it is a less conspicuous object. Many of the Grecian buildings were never intended to be roofed at all; but where a roof is necessary, it was not attempted to be hidden, but constituted one of the most ornamental parts of the building. Of timber roofs, we have no examples in Grecian buildings; but the beautiful stone roof of the Octagon Tower of Andronicus Cyrrhestes, and that of the Choragic Monument of Lysicrates, are sufficient to show that they were more inclined to ornament than to hide this essential part of a building.

The height of roofs, at the present time, is seldom above one-third of the span, and should never be less than one-sixth. The most usual pitch is when the height is one-fourth of the span, or when the angle with the horizon is 26½ degrees.

The pediments of the Greek temples make an angle of from 12 to 16 degrees with the horizon; the latter corresponds nearly with one-seventh of the span. The pediments of the Roman buildings vary from 23 to 24 degrees: 24 degrees is nearly two-ninths of the span.

Digitized by Google

PLATE 5.

CARPENTRY *is the art of cutting and jointing timbers in the construction of buildings.*

To cut timbers and adapt them to their various situations, so that one of the sides of every piece shall be arranged according to a given plane or surface shown in the designs of the architect, is a department of carpentry which requires a thorough knowledge of the finding of sections of solids, their coverings, and the various methods of connecting timbers, etc.

The art of combining pieces of timber to increase their strength and firmness, is called *framing.*

The form of a frame should be adapted to the nature of the load which it is designed to carry.

In carpentry, the load is usually distributed over the whole length of the framing, but it is generally supported from point to point, by short beams or joists.

First, let us consider a case where the load is collected at one point of the frame; and, in order that the advantage of framing may be more obvious, let us suppose all the parts of a certain piece of frame-work to be cut out of a single beam, which, in a solid mass, would be too weak for the purpose.

Let Fig. 1 be a piece of timber, cut in the various directions indicated by the lines passing through it, and let the triangular piece shown at E and F be removed; then raise the pieces A E and A F till they make close joints at E and F, and increase their lengths till they form a frame, or truss, as represented at Fig. 2. A small rod of iron with suitable nuts, will be required to support the centre of the tie, as seen in the drawing. If the depth of the frame at the middle be double the depth of the beam, the strength of the frame will be a little more than eight times as great as that of the beam. If the depth of the frame be three times the depth of the beam, as represented at Fig. 2, it will be about six times as strong as the beam, and about eighteen times as firm: that is, it will bend only an eighteenth part of the distance which the beam would bend, under the same weight.

To render the strength more equal, and to obtain two points of support, there may be a level piece of timber placed between the inclining ones, as shown at Fig. 3; but if a greater weight be placed at G than at H, there will be a tendency to spring upwards at H, and inwards at A, which may be effectually prevented by the suspension rod A A, as shown in the same figure.

Digitized by Google

Fig. 1.

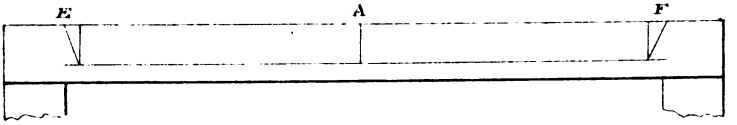

Fig. 2.

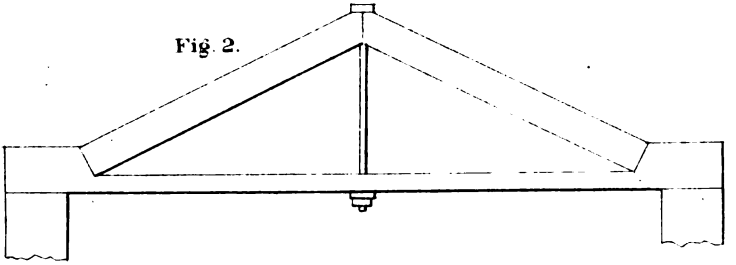

Fig. 3.

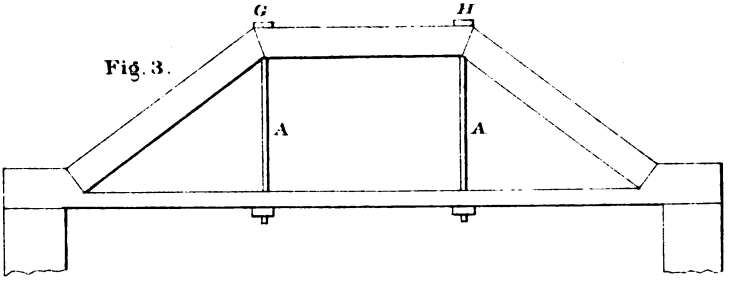

Fig. 4.

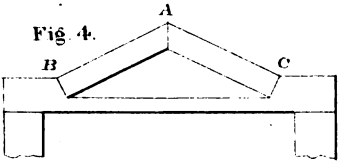

Fig. 5.

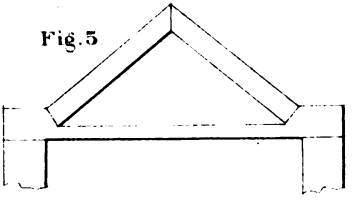

Fig. 6.

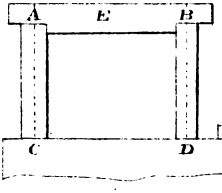

Fig. 7.

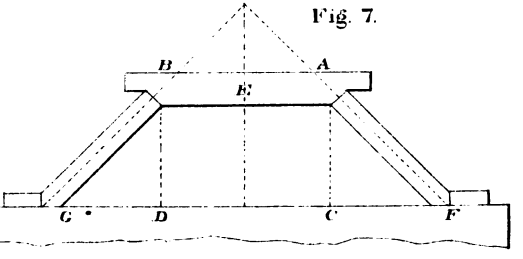

Digitized by Google

Digitized by Google

It now remains to show why the strength of a piece of timber is increased by forming it into a truss; and to have a clear conception of this subject is of the utmost importance in the science of carpentry.

Let A B C, Fig. 4, be a truss to support a weight applied at A. It is evident that the force of the weight will tend to spread the abutments, B and C, and the nearer we reduce the angle A B C to a straight line, the greater will be the pressure, or tendency to spread or increase at A. On the contrary, if the height be increased, as at Fig. 5, the tendency to spread the abutment will be less.

The advantage of framing timbers together for the purpose of giving strength and firmness having been shown, let us proceed to explain how the strain on any part may be measured.

To find the pressure on oblique supports or parts of trusses, frames, etc. Let A C, Fig. 6, be a heavy beam supported by two posts, A C and B D, placed at equal distances from E, the centre of the beam. The pressure on each post will obviously be equal to half the weight of the beam. But if the posts be placed obliquely, as in Fig. 7, the pressure on each post will be increased in the same proportion as its length is increased, the height A C being the same as before; that is, when A F is double A C, the pressure on the post in the direction of its length, is double half the weight of the beam. Hence it is very easy to find the pressure in the direction of an inclined strut, for it is as many times half the weight supported as A C is contained in A F. Therefore, if the depth A C of a truss to support a weight of two tons be only one foot, and A F be ten feet, the pressure in the direction of A F will be ten tons.

It will be observed that when the beam is supported by oblique posts, as in Fig. 7, these posts will slide out at the bottom, and together at the top, if not prevented by proper abutments. The force with which the foot F tends to slide out is to half the weight of the beam A B, as F C is to A C. Therefore, when F C is equal to A C, the tendency to slide out is equal to half the weight supported; and if F C be ten times A C, the tendency to spread out would be ten times the weight supported. Hence it is evident that a flat truss requires a tie of immense strength to prevent it from spreading. If a flat truss produces any degree of stretching in the tie, the truss must obviously settle, and by settling it becomes flat, and consequently exerts a greater strain. In a flat truss, therefore, too much caution cannot be used in fitting the joints and choosing good materials.

Digitized by Google

PLATE 6.

In framing, all pieces placed at right angles to each other are cut square or beveled; but when placed diagonally and oblique to the base, require a geometrical operation to find a section of the piece whose sides shall be in the plane of those it is connected with. It is intended, therefore, to present, at this time, a new and complete system of lines for finding sections and cuts of pieces placed in any position, from the horizontal to the perpendicular, by means of tangents and circles.

Let A B C D, FIG. 1, represent the plan of a right-angled hip roof, and B F C the elevation. To find a section of the hip-rafters, draw G H at right angles to B E: from the point H as centre, with H J as radius, describe an arc; from the point G, draw the tangent, cutting the line B E at R; join H R, which forms the angle for the section required.

To find the lengths of the hip and jack-rafters. Draw D L, Fig. 1, equal to the common rafter C F, Fig. 2; join C L for the length of the hip-rafters. To find the lengths of the jack-rafters, divide the common rafter D L into as many parts as there are jack-rafters required.

To find the bevels for the hip and jack-rafters. Draw C N, Fig. 1, equal to C E, and L N equal to P F, Fig. 2; then in the angle at L is the down bevel, and at C the face bevel, for the hip-rafters. The face and down bevels for the jack-rafters are shown at E and F.

Figure 3 exhibits the application of the foregoing system to an obtuse and acute-angled plan; the operation is precisely the same, and consequently needs no further explanation.

Digitized by Google

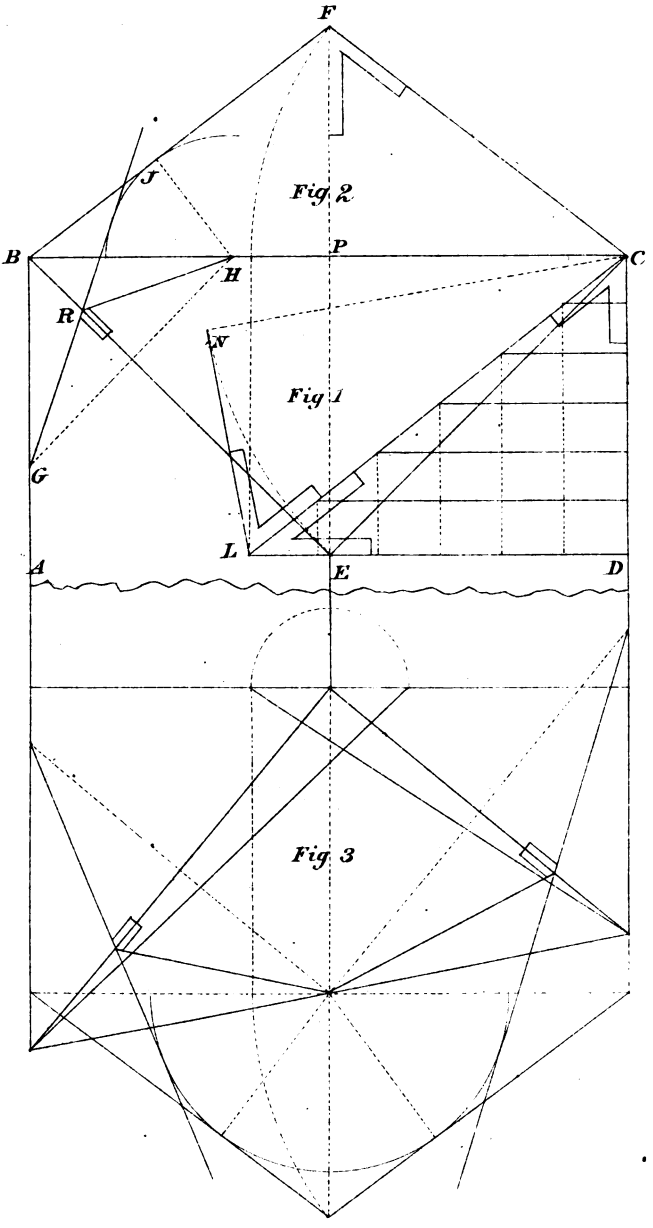

Digitized by Google

Digitized by Google

ROOF COVERINGS.

The kinds of covering used for timber roofs, are copper, lead, iron, tinned iron, slates of different kinds, tiles, shingles, gravel, felt and cement. Taking the angle for slates to be 26½ degrees, the following table will show the degree of inclination that may be given for other materials.

Kind of covering.	Inclination to the horizon, in degrees.		Height of roof in parts of the span.	Weight upon a square of roofing.
	Deg.	Min.		
Tin,.....	3	50	$\frac{1}{48}$	50 pounds.
Copper,.....	3	50	$\frac{1}{48}$	100 "
Lead,.....	3	50	$\frac{1}{48}$	700 "
Slates, large,.... ...	22	00	$\frac{1}{5}$	1120 "
" ordinary,.....	26	33	$\frac{1}{4}$	900 "
" fine,.....	26	33	$\frac{1}{4}$	500 "
Plain tiles,.....	29	41	$\frac{2}{7}$	1780 "
Gravel,.....				
Felt and Cement,....				

Felt and Cement or Gravel Roofing can be used at almost any inclination that other materials are used.

Digitized by Google

PLATE 7.

FIGURE 1.—*Exhibits rules for finding the backing of the hip-rafters, the lengths and cuts of jack-rafters, where the pitches are not at the same angle of elevation.*

Let A B C and D be the plan of the roof, A E B the plan of the hips, F G and J H the height of the rafters; join A G and A H; then A G will be the pitch of the roof over the line E J, and A H the pitch over the line E F, and E A the line of intersection. The down and face bevels for the jack-rafters and hips are all shown; the principle and method of finding the section of the hip are the same as shown on Plate 6.

FIGURE 2.—*Exhibits the method of finding the distance to kerf the back string for a circular stairs so that when secured in its place the saw-kerfs shall be closed.*

To find the distance the saw-kerfs shall be from each other, make C D equal the radius of the required circle shown at A B, then take a piece the thickness of the string-piece, any width; make a saw-kerf in the centre as shown at C; secure the piece at C and F; move the piece from D until the saw-kerf is closed at C, which will give the points for the saw-kerfs required, as shown on the curve line at E and D.

FIGURE 3.—*Exhibits a very cheap and expeditious plan for framing a roof to span from forty to seventy feet.*—It requires no explanation, further than to say that the tie need not be more than 5x8 inches; the rafters and braces 5x5 inches; the battens, of one inch boards spiked to the timbers with large nails. It is believed to be the best roof that can be constructed, as it has all the advantages of a solid mass, without the great weight and the disadvantages of the shrinkage of material, which is almost entirely obviated by the crossing of the fibres of the wood.

Digitized by Google

Fig. 1.

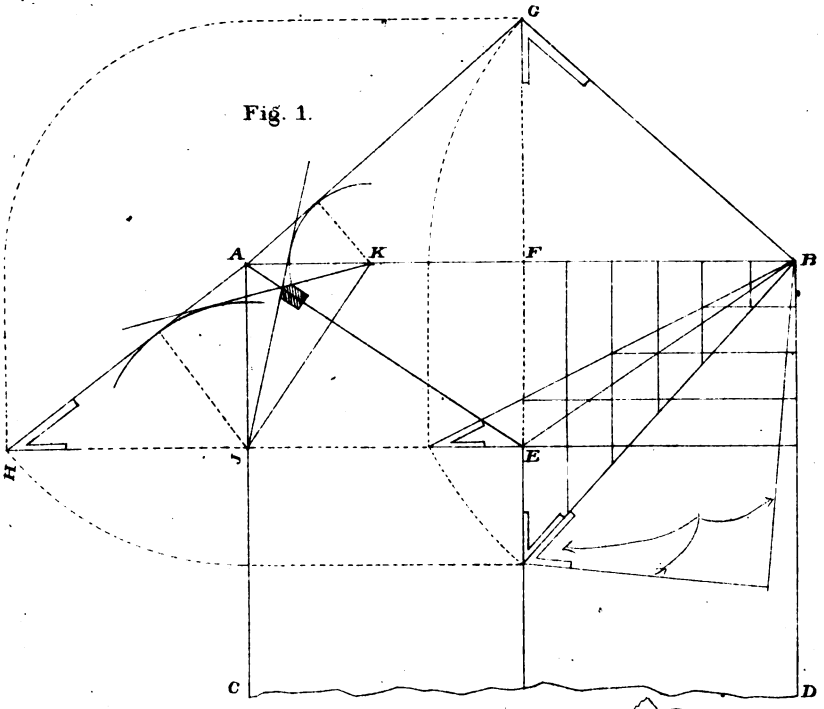

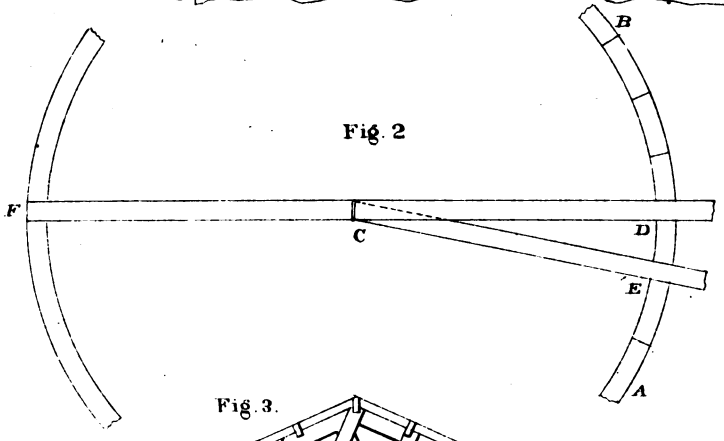

Fig. 2

Fig. 3.

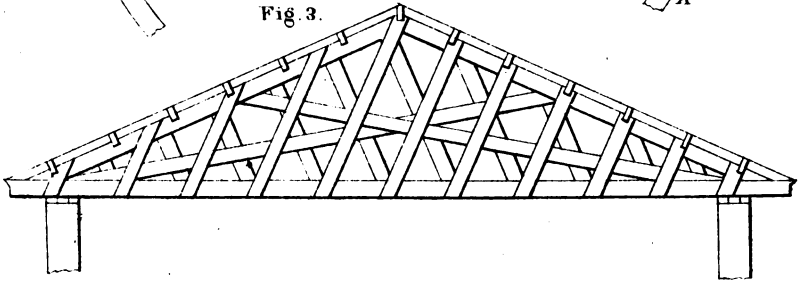

Digitized by Google

Digitized by Google

LONG MEASURE.

Long measure is used in measuring length or distance only, without regard to breadth or depth. Its denominations are *leagues, miles, furlongs, rods, yards, feet and inches.*

12	inches	make	1 foot.
3	feet	"	1 yard.
5½	yards or 16½ feet	"	1 rod.
40	rods	"	1 furlong.
8	furlongs, or 320 rods,	"	1 mile.
3	miles	"	1 league.

NOTE.—4 inches make 1 hand; 9 inches 1 span; 18 inches 1 cubit; 6 feet 1 fathom; 4 rods, or 100 links, 1 chain; 25 links 1 rod; $7\frac{92}{100}$ inches, 1 link.

The chain is commonly used in measuring roads and land, and is called Gunter's chain, from the name of the inventor.

A knot, in sea phrase, answers to a nautical or geographical mile of 5280 feet.

Mariner's measure is a kind of long measure used in estimating distances at sea.

6 feet	make	1 fathom.
120 fathoms	"	1 cable-length.
880 fathoms, or 7⅓ cable	"	1 mile.

Digitized by Google

PLATE 8.

Exhibits the plan of a roof with internal angles formed by a transept and gable placed opposite each other.

Let A B and C D represent the plan of the valley-rafters; Fig. 1 and Fig. 2, the elevations of the roofs. To find a section of the valley-rafters, draw the dotted line S L, at right angles to C D: from the points S and L as centres, describe arcs touching the lines C J and C P; tangent to the arcs, draw lines from L and S, intersecting on the line C D, forming the internal angle required for the valley-rafters. The face-bevels for the hips and jack-rafters are shown at 3 and 4. The down-bevel for the hip-rafters is shown at 2. The down bevels for the common and jack-rafters, are shown at J and P. At A is shown a section of the valley-rafters for the gable A D.

FIGURE 3.—Exhibits the plan and elevation of a grain-mill hopper; giving the exact form of the sides, also the angle to mitre, or butt the joints, with the angle-piece to secure the same.

Digitized by Google

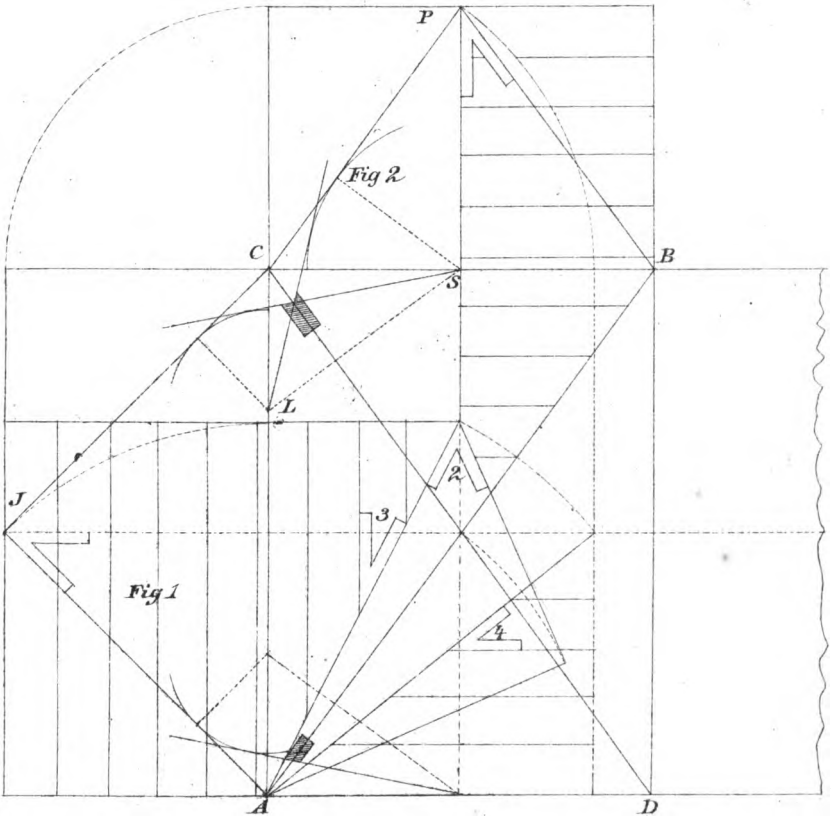

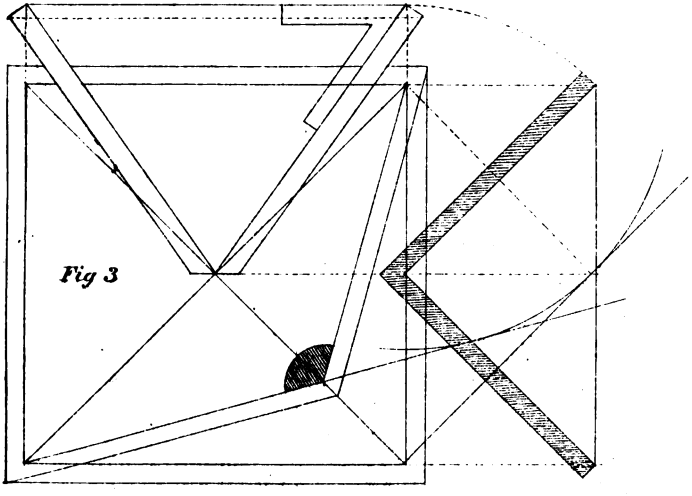

Digitized by Google

Digitized by Google

SQUARE MEASURE.

Square measure is used in measuring surfaces, or things whose length and breadth are considered, without regard to heighth or depth: as land, flooring, plastering, etc. Its denominations are *Acres, Roods, Square rods, Yards, Square feet, and Square inches.*

144	square inches -	make	1 square foot.
9	square feet - -	"	1 " yard.
30¼ square yards, or 272¼ square feet,		"	1 square rod, perch or pole.
40	square rods - - -	"	1 rood.
4	roods, or 160 square rods,		1 acre.
640	acres - - - -		1 square mile.

NOTE.—16 square rods make 1 square chain; 10 square chains, or 100,000 square links, make an acre. Flooring, roofing, plastering, etc., are frequently estimated by the "square" which contains 100 square feet.

NOTE.—A chain is 66 feet in length, and is divided into 100 equal parts, or links. The length of a link is, therefore, 7.92 inches.

Digitized by Google

PLATE 9.

Exhibits the plan and elevation of an obtuse and acute-angled building.—The projections of rafters are supported by braces.

At Figure 1, A represents the plan of the post; B, the rafter; and C, the elevation of the post. At Fig. 4, D represents the plate, and the elevation of the rafter. To find the bevel for the lower-edge of the brace, draw F G parallel to the edge of the post; draw the under-side of the brace at H equal in width to B, Fig. 1. Then, from the point G as centre, describe an arc: from the tangent F G, tangent to the arc, draw a line at right angles to the brace; join the points of intersection for the angle required. The bevel for the edge of the rafter, when in the plane of the roof, is given at E; the bevel for the butt joint at the apex, or peak of the roof, is given at F, Fig. 4.

FIGURE 5.—*To draw a line forming equal angles with two converging lines.* Draw the converging lines A D and B C, indefinitely. At any point H, draw H I parallel to A D, and H G parallel to B C: from the points I and G as centres, describe arcs; through the points of intersection, draw E F, the line required.

Digitized by Google

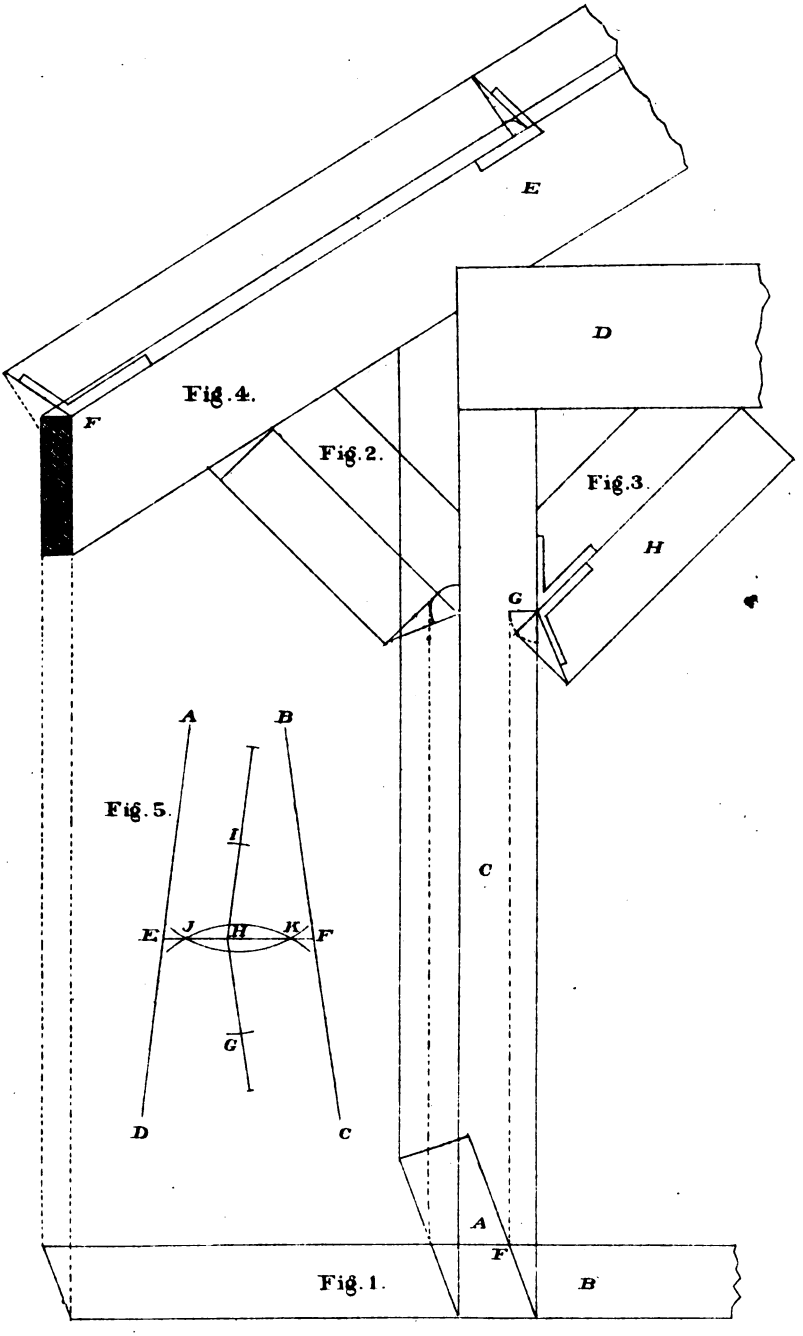

Digitized by Google

Digitized by Google

WEIGHT OR FORCE

REQUIRED TO TEAR ASUNDER ONE SQUARE INCH OF THE DIFFERENT MATERIALS USED IN THE CONSTRUCTION OF BUILDINGS.

WOODS AND METALS.

Oak, American,	17,300	Swedish Iron,	78,850
Oak, English,	19,800	English Iron,	55,772
Beech,	17,700	French Iron,	61,041
Ash,	16,700	Russian Iron,	59,472
Elm,	13,489	Cast Iron,	42,000
Walnut,	8,130	Steel, Soft,	120,000
Norway Pine,	14,300	Ivory,	16,000
Georgia Pine,	7,818	Marble,	8,700
White Pine,	8,800	Whalebone,	7,600
Iron Wire,	113,077		

To find the strength of Cohesion: Multiply area of section, in inches, by the weight required to tear one inch asunder, and the product is the strength in pounds.

WEIGHTS

REQUIRED TO CRUSH ONE CUBIC INCH OF SEVERAL MATERIALS USED IN THE CONSTRUCTION OF BUILDINGS.

METALS.		WOODS.	
Cast Iron,	116,700	Elm,	1,284
Brass,	154,784	American Pine,	1,606
Copper, Cast,	116,102	White Deal,	1,928
Lead, Cast,	8,042	White Oak,	3,240
		English Oak,	3,860

STONES.

Freestone,	18,000	Brick, hard,	1,754
Limestone, Black,	19,450	Brick, soft,	1,224
Granite, Blue,	20,890	Chalk,	1,040

Digitized by Google

PLATE 10.

Exhibits rules for finding the lines to cut a mitre-box for sprung mouldings; also the plans and elevations for octagonal and hexagonal roofs, to find the lengths and cuts of the angle and jack-rafters.

Let A, Fig. 1, represent the elevation of the sprung moulding, C D the mitre joint, and N the angle. To find the bevels for the top and side of the box: from the point E as centre, with E G as radius, describe the semi-circle F H; draw E I at right angles to E G; from the points F G I and H, draw lines at right angles to F H, indefinitely; draw C K and D J parallel to F H; join L K and L J. The bevel for the top of the box is shown at M; for the side of the box, at N.

FIGURE 2.—Represents the plan and elevation of an octagonal roof. To find the backing of the angle-rafters: from the point H as centre, describe an arc touching the line E G, tangent to the arc; draw B I; join H J, the angle required.—To find the length of the angle and jack-rafters, draw K L equal to F G; then L D equals the length of the angle-rafters: the length of the jack-rafters depends on the distance they are placed from each other. The face bevel for the angle and jack-rafters is shown at N; the down bevel for the angle rafter is shown at O; for the jack-rafters, at G.

FIGURE 3.—Represents the plan and elevation of a hexagonal roof. The rules for finding the angles and cuts of the rafters are the same as shown in the preceding figure; therefore, a bare inspection is sufficient for its comprehension.

Digitized by Google

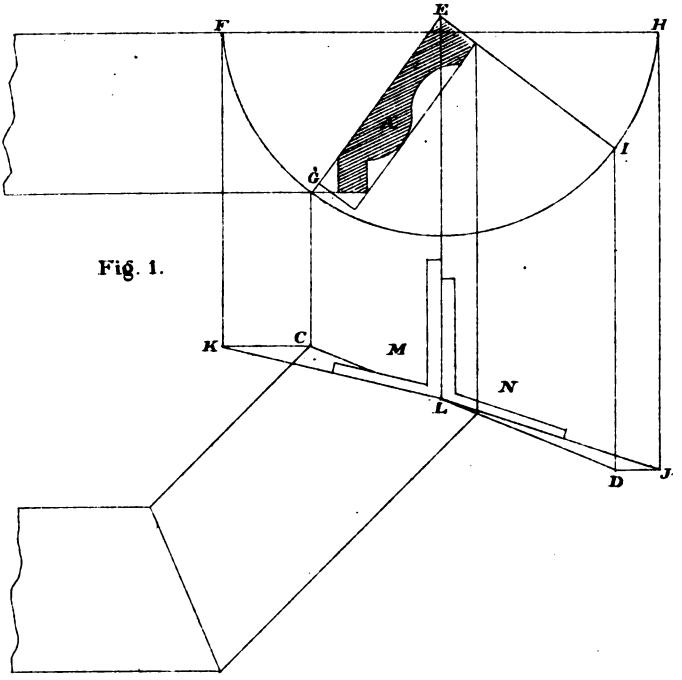

Fig. 1.

Fig. 2

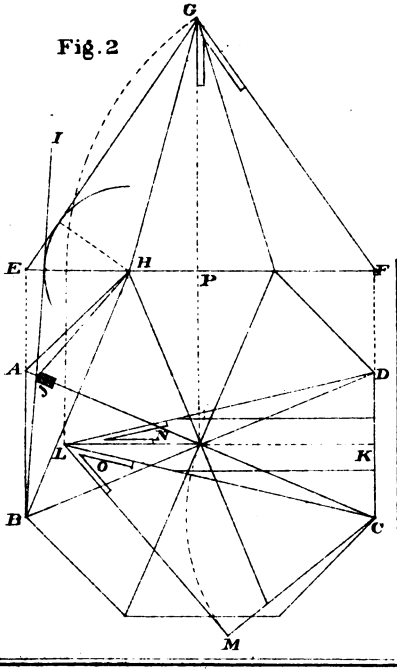

Fig. 3.

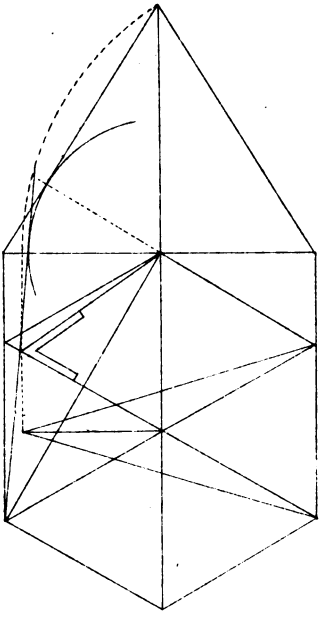

Digitized by Google

Digitized by Google

POSTS.

According to the experiments of Rondelet, when the height of a square post is less than about seven or eight times the side of its base, it cannot be bent by any pressure less than that which would crush it. The internal mechanism of the resisting forces when timber yields by crushing is not exactly understood. In timber, the resistance to crushing is less than the cohesive force. The resistance of timber to crushing appears to increase in a higher ratio than that of the area of its section.

The load a piece of timber will bear, when pressed in the direction of its length, without risk of being crushed, may be found by the following rule:

Multiply the area of the piece of timber, in inches, by the weight that is capable of crushing a square inch of the same kind of wood, then one-fourth of the product will give the load, in pounds, that the piece would bear with safety.

If the area that would support a given weight be required, divide four times the weight by the number of pounds that would crush a square inch, and the quotient is the area, in inches.

The length should never exceed ten times the side of the section, to give the above results; for, when the length is greater than about ten times the thickness, the piece will bend before it crushes.

Digitized by Google

PLATE 11.

Exhibits plans and elevations of octagonal and square spires for churches or bell towers.

To find the lengths of the angle posts at Fig. 1. Draw B A equal to C D; join E A and F A, the length required. The bevel for the intersection of the angle posts is shown at A. The bevel for the face of the inter-ties is shown at G. The bevel for the external angle of the posts and the sides of the inter-ties is shown at H.

Figure 2 represents the plan and elevation of a square spire, or tower. The operation of finding the lines is the same as in Fig. 1.

To find the centre of a circle when lost. From the points A, B, C, Fig. 3, as centres, describe arcs intersecting each other at G D and E F; through the points of intersection, draw lines to intersect each other at the point required.

To erect a perpendicular to a given line, from a given point. From the point C, Fig. 4, set off, each way, equal distances: from the points describe arcs cutting each other at D; join C D, the perpendicular required.

Digitized by Google

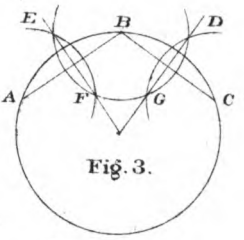

Fig. 3.

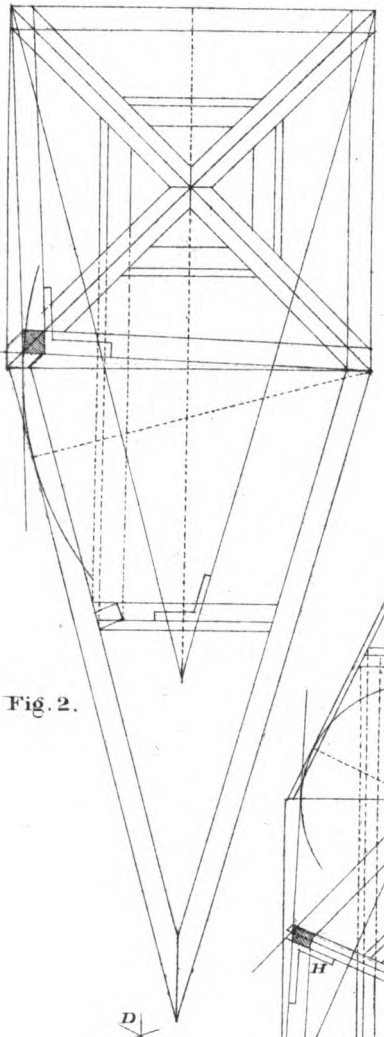

Fig. 2.

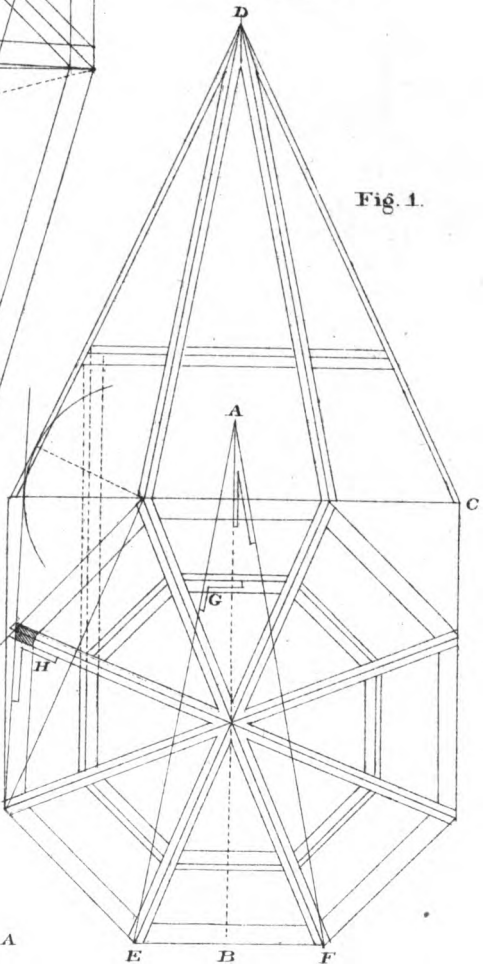

Fig. 1.

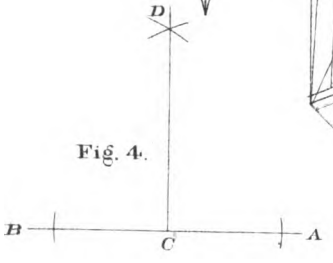

Fig. 4.

Digitized by Google

Digitized by Google

WEIGHT IN POUNDS

OF A CUBIC FOOT OF WOOD OR STONE.

WOOD.

Apple-tree,	49.6
Ash,	52.9
Birch,	33.2
American Cedar,	35.1
Elm,	42.
White Pine,	35.6
Yellow Pine,	41.1
Mahogany,	66.5
Maple,	47.
Mulberry,	56.1
Oak,	58.74
Live Oak,	70.

STONE.

Flint,	163.2
Blue Granite,	164.1
Limestone,	199.
Grindstone,	134.
Slate Stone,	167.
Marble,	170.
Freestone,	150.
African Marble,	169.2
Egyptian Marble,	166.8
Italian Marble,	166.1
Roman Marble,	172.2

OTHER SUBSTANCES.

Cast Iron,	450.55
Wrought Iron,	486.65
Steel,	489.8
Copper,	555.
Lead,	708.75
Brass,	537.75
Tin,	456.
Salt-water, (Sea,)	64.3
Fresh-water,	62.5
Air,	.07529
Steam,	.03689
Loose Earth or Sand,	95.
Common Soil,	124.
Strong Soil,	127.
Clay,	135.
Clay and Stones,	160.
Cork	15.
Brick,	125.
Tallow,	59.

Digitized by Google

PLATE 12.

Exhibits the operation of finding the curve of what are termed, among carpenters, sprung mouldings for circular cornices.

The stuff from which they are obtained is thinner than if the angular piece were worked on the moulding. These mouldings require brackets, as at Fig. 1, placed at proper distances, either in a straight or curved line. If they are curved, the moulding will require to be bent as in covering the frustrum of a cone.

FIGURE. 2.—Represents the plan and elevation of a circular moulding. To find the radius to describe the curve, produce B D to C: from the point C as centre, describe the curves required. The curve of the moulding, when in position, is shown at D H, and will require to be kerfed at proper distances, a rule for which is given in plate 7, Fig. 2.

FIGURE 3.—Exhibits the elevation of an Ogee cornice. The centres from which the curves are described are found in the same manner as in the preceding figure.

A tangent to a circle being given, to find the point of contact.

From the centre A, Fig. 4, describe the circle: draw the tangent B D, indefinitely; bisect A B: from the point C, describe the arc A B cutting the circle at D, the point required.

Digitized by Google

Fig. 3

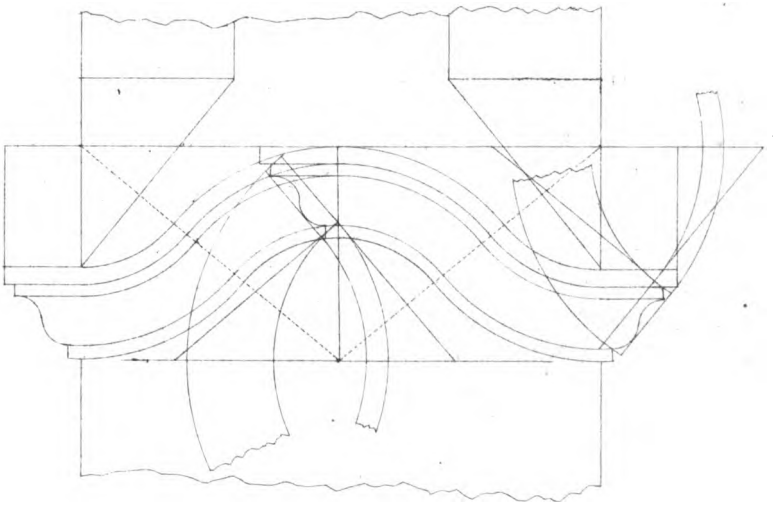

Fig 2

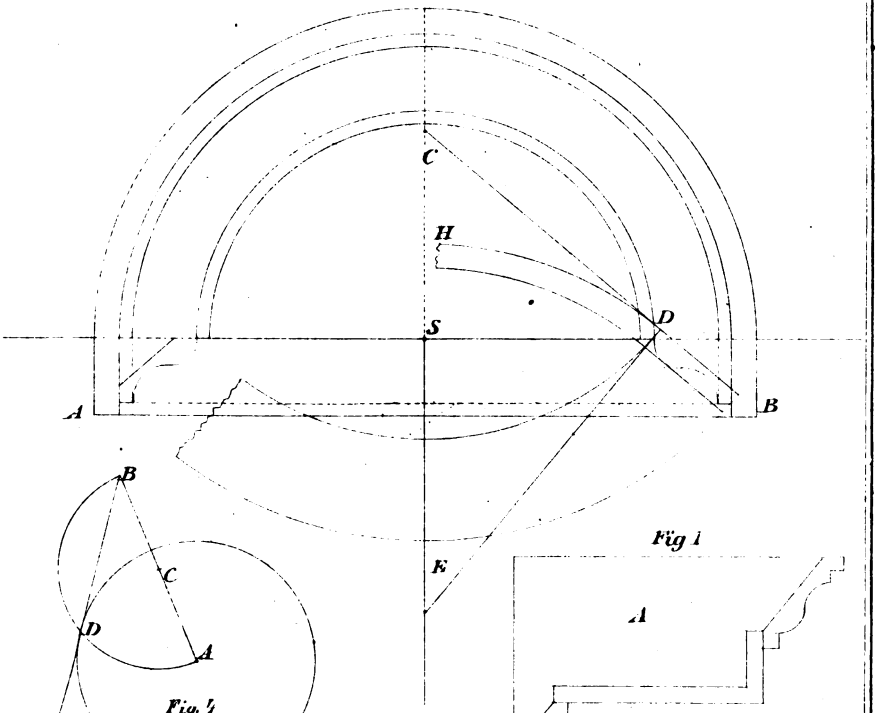

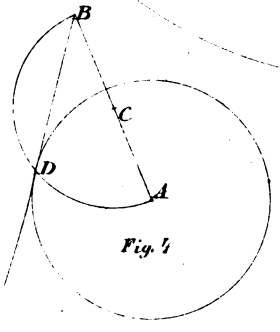

Fig. 4

Fig 1

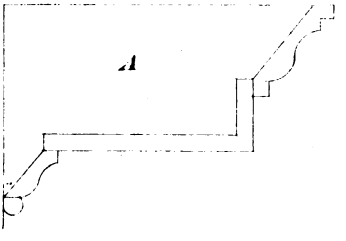

Digitized by Google

Digitized by Google

ADHESION OF NAILS.

Every carpenter is familiar with the use of nails, and possesses a practical knowledge, more or less accurate, of the force of adhesion of different nails, and in different substances, so as to decide, without difficulty, what number, and of what length, may be sufficient to fasten together substances of various shapes, and subject to various strains. But interesting as this subject unquestionably is, it has not been till very recently that the necessary experiments have been made to determine: 1st, the adhesive force of different nails, when driven into wood of different species: 2d, the actual weight, without impulse, necessary to force a nail a given depth; and 3d, the force required to extract the nail when so driven. The obtaining of this useful knowledge was reserved for Mr. B. Bevan, a gentleman well known in the mechanical and scientific world, for the accuracy with which his experiments are conducted.

Mr. Bevan observes, that the theoretical investigation points out an equality of resistance to the entrance and extraction of a nail, supposing the thickness to be invariable; but as the general shape of nails is tapering towards the point, the resistance of entrance necessarily becomes greater than that of extraction; in some experiments he found the ratio to be about 6 to 5.

The percussive force required to drive the common sixpenny nail to the depth of one inch and a half, into dry Christiana deal, with a cast iron weight of 6.275 lbs. was four blows, or strokes, falling freely the space of 12 inches; and the steady pressure to produce the same effect was 400 lbs.

Digitized by Google

PLATE 13.

Represents the geometrical operation of finding the lines required for the sides and edges of pieces placed at a given angle oblique to the base.—To butt or miter over obtuse and acute angles.

To find the bevels required for the obtuse angle, F G H, Fig. 1. Draw the base A B, indefinitely. Draw C D, the angle and height required. To find the angle, to cut the face of the piece C D: from the point C as centre, with C D as radius, describe an arc cutting the base at R; then R G C forms the angle required. To find the angle to cut the edge of the piece: from the point H as centre, and with H J as radius, describe an arc; tangent to the arc, and parallel to N J, draw the dotted line to intersect the base at A; join A G and N F; then A G C forms the angle required. The bevel required for the butt joint is given at A. Join A G; then A G C forms the angle required.

The operation of finding the bevels for the acute-angled plan at Fig. 2 is nearly the same, and consequently needs no explanation.

These rules will be found useful to workmen in constructing boxes where the sides are required to be placed oblique to the base. Also for mitring or butting purlins or other timbers when placed in similar positions.

Digitized by Google

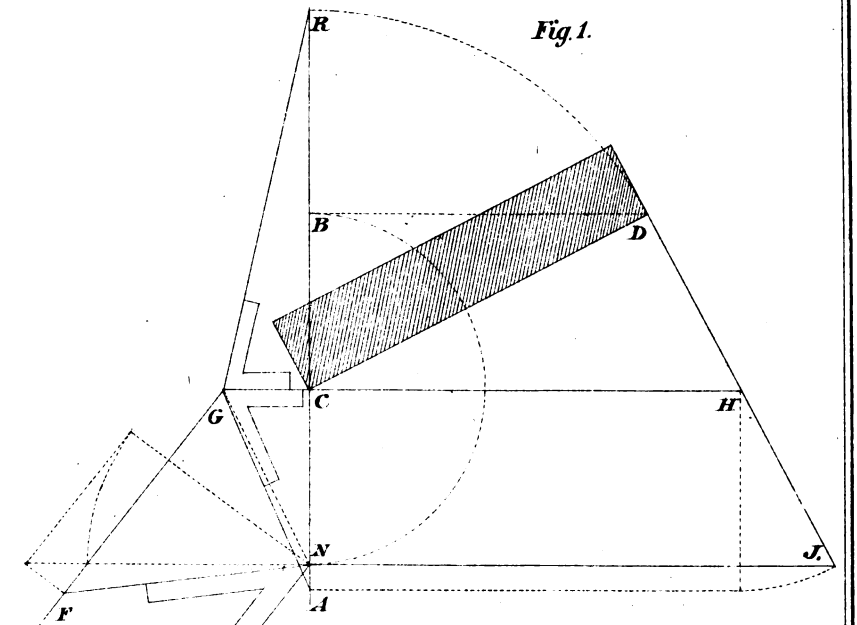

Fig. 1.

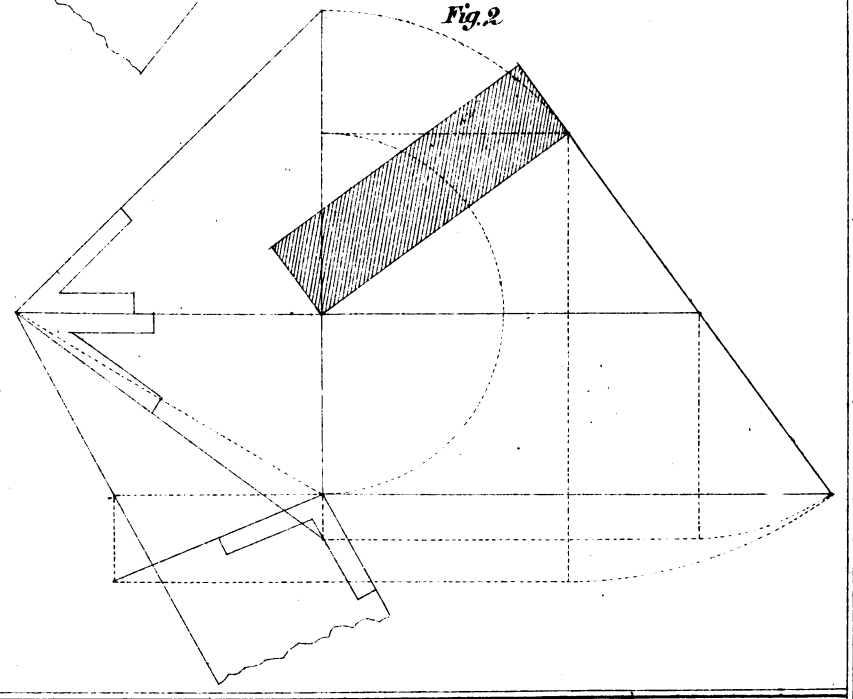

Fig. 2.

Digitized by Google

Digitized by Google

ADHESION OF NAILS.

A sixpenny nail driven into dry elm, to the depth of one inch, across the grain, required a pressure of 327 pounds to extract it; and the same nail, driven endways, or longitudinally, into the same wood, was extracted by a force of 257 pounds.

The same nail driven two inches, endways, into dry Christiana deal, was drawn by a force of 257 pounds; and to draw out one inch, under like circumstances, took 87 pounds only. The relative adhesion, therefore, in the same wood, when driven transversely and longitudinally, is 100 to 78, or about 4 to 3, in dry elm; and 100 to 46, or about 2 to 1, in deal; and, in like circumstances, the relative adhesion to elm and deal is as 2 or 3 to 1.

The progressive depths of a sixpenny nail into dry Christiana deal by simple pressure were as follows:—

One-quarter of an inch, a pressure of	24 lbs.
Half an inch, - - - -	76 "
One inch, - - - - -	235 "
One inch and a half, - - -	400 "
Two inches, - - - -	610 "

In the above experiments, great care was taken by Mr. Bevan to apply the weight steadily; and, towards the conclusion of each experiment, the additions did not exceed 10 pounds at one time; with a moderative interval between, generally about one minute, sometimes 10 or 20 minutes. In other species of wood, the requisite force to extract the nail was different. Thus, to extract a common sixpenny nail from a depth of one inch out of

Dry Oak, required - - -	507 lbs.
Dry Beech, - - - -	667 "
Green Sycamore, - - - -	313 "

From these experiments, we may infer that a common sixpenny nail, driven two inches into oak, would require a force of more than one-half a ton to extract it by a steady force.

Digitized by Google

PLATE 14.

FIGURE 1.—*Represents a geometrical demonstration of finding the side of a square, the area of which shall be equal to the area of the circle. Also to find the side of a cube, the content of which shall be equal to the content of a globe, or ball, as follows:*

From the point A as centre, with the radius of the circle, describe an arc cutting the circle at C: from the point C as centre, with C D. as radius, describe an arc cutting the circle at E. Draw E G parallel to A E, and G S at right angles to A B; join H S, the side required. To find the side of a cube: from the point F as centre describe an arc cutting the circle at L; join H L, the side required.

FIGURES 2, 3.—Represent the plan and elevation of a box, the sides of which are placed at different angles. To find the face-bevel for the side 5 L, draw 2 E equal to L 5: from the point 2 as centre, describe the arc E T; square over from T to N; join 2 N, the angle required. The face bevel for the side 2 3 is given at S. The bevel required to miter the edges is drawn at P. To find the angle for butt joints, draw 6 G at right angles to 2 H: from the points 6 and G as centres, describe arcs touching the lines 2 3 and 2 E; tangent to the arcs, draw lines from 6 and G, intersecting on the line 2 H, forming the angle required. The bevel to be applied at right angles to the joint.

Digitized by Google

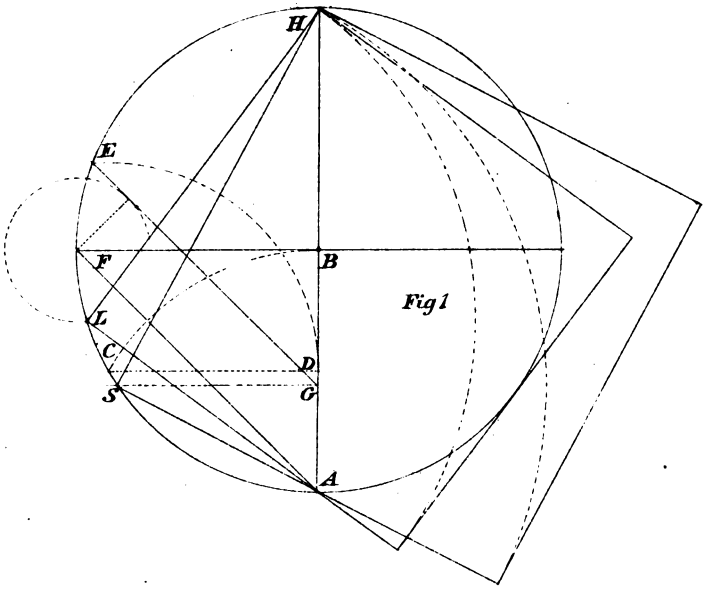

Fig 1

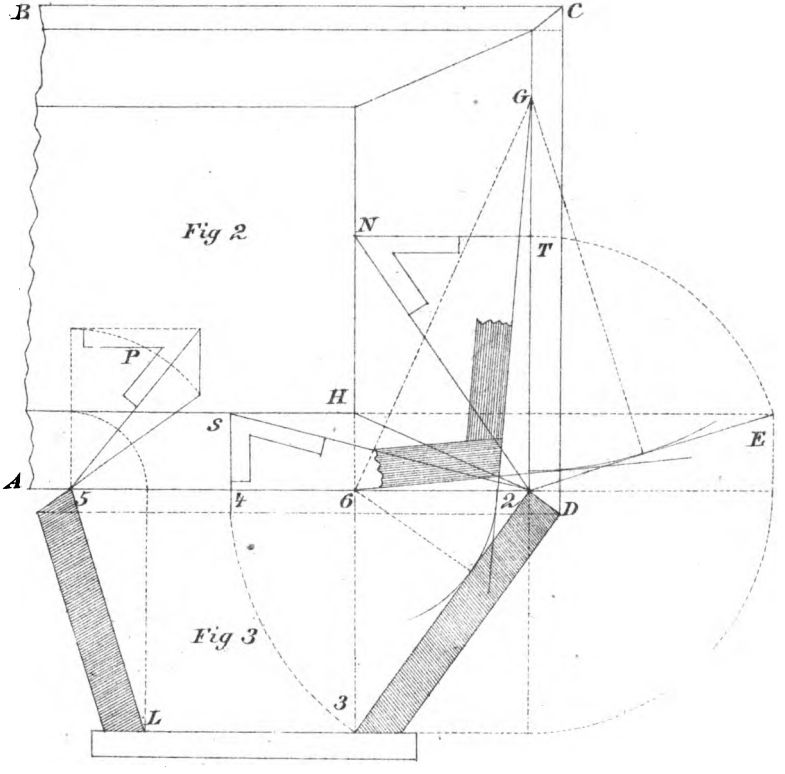

Fig 2

Fig 3

Digitized by Google

Digitized by Google

ADHESION OF SCREWS.

A common screw, of one-fifth of an inch, was found to have an adhesive force of about three times that of a six-penny nail.

ADHESION OF IRON PINS.

The force necessary to break or tear out a half-inch iron pin, applied in the manner of a pin to a tenon in the mortice, has likewise obtained the attention of the same celebrated experimentalist. The thickness of the board was 0.87 inch, and the distance of the centre of the hole from the end of the board, 1.05 inch. The force required was 916 lbs.

As the strength of a tenon from the pin-hole may be considered in proportion to the distance from the end, and also as the thickness, we may, for this species of wood, obtain the breaking force in pounds, nearly, by multiplying together one thousand times the distance of the hole from the end, by the thickness of the tenon, in inches.

LENGTH OF IRON NAILS

AND NUMBER TO A POUND.

SIZE.	LENGTH.	NO.	SIZE.	LENGTH.	NO.
3d	1¼ in.	420	10d	3 in.	65
4d	1½ in.	270	12d	3¼ in.	52
5d	1¾ in.	220	20d	3½ in.	28
6d	2 in.	175	30d	4 in.	24
8d	2½ in.	100	40d	4½ in.	20

Digitized by Google

PLATE 15.

Exhibits the plan and elevation of the angle brackets required for internal and external angles, formed with a cord or string.

To find the points for the pins, to describe the elliptic curve required for the angle bracket, square up from S to H, Fig. 1, equal to B D: from the point H as centre, with S C as radius, describe arcs cutting the major axis at 2 and 3, the points required.

FIGURE 2.—Exhibits the plan and elevation for an internal angle; the elliptic curve of the bracket is found in the same manner as Fig. 1.

FIGURE 3.—Exhibits a geometrical demonstration of finding the centre of a circle when lost. Take any points, A, C, D, equally distant from each other, as centres, from which describe arcs cutting each other; through the points of intersection draw lines to intersect at J, the point required.

To erect a perpendicular from the extremity of a given line. Draw the line A B, Fig. 4. To find the perpendicular B C: from any point D as centre, with D B as radius, describe an arc, cutting the given line at A; join A D, and extend to C; join B C, the perpendicular required.

Digitized by Google

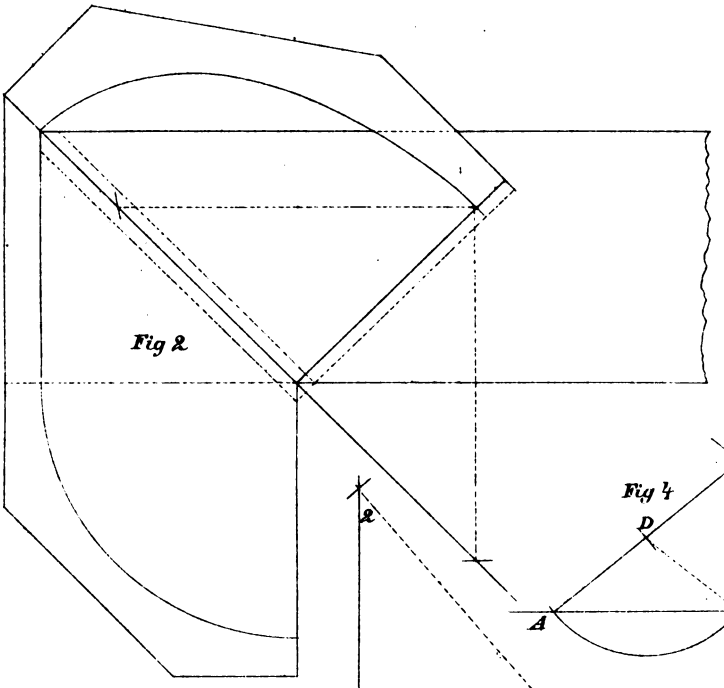

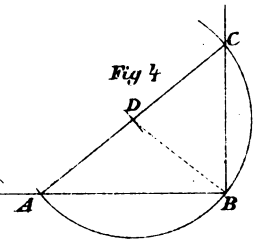

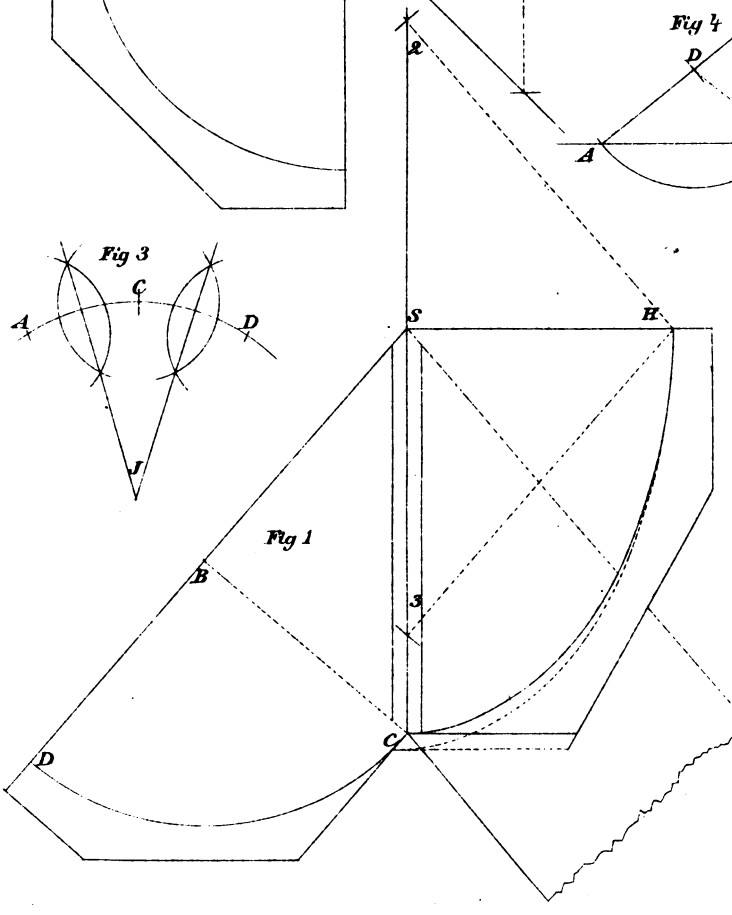

Digitized by Google

Digitized by Google

ADHESION OF GLUE.

Mr. Bevan glued together, by the ends, two cylinders of dry ash-wood, one-fifth of an inch diameter and about eight inches long; after they had been glued together 24 hours, they required a force of 1260 pounds to separate them; and, as the area of the circular ends of the cylinders was 1.76 inches, it follows that the force of 715 pounds would be required to separate one square inch.

It is right to observe, that the glue used in this experiment was newly made, and the season very dry. For in some former experiments on this substance, made in the winter season, and upon some glue which had been frequently made by occasional additions of glue and water, he obtained a result of 350 to 560 pounds to the square inch.

The present experiment, however, was conducted upon a larger scale, and with greater care in the direction of the resultant force, so that it might be, as near as practicable, in a line passing at right angles through the centres of the surfaces in contact. The pressure was applied gradually, and was sustained two or three minutes before it separated.

Upon examining the separated surfaces, the glue appeared to be very thin, and did not entirely cover the wood, so that the actual adhesion of glue must be something greater than 715 pounds to the square inch.

Mr. Bevan also tried the lateral cohesion of fir-wood, from a Scotch fir of his own planting, cut down in the autumn, sawn into boards, and, at the time of experiment, quite dry and seasoned. The force required to separate the wood, was 562 pounds to the square inch; consequently, if two pieces of this wood had been well glued together, the wood would have yielded in its substance before the glue.

In a subsequent experiment, made on solid glue, the cohesive force was found to be 4000 pounds per square inch; from which it may be inferred, that the application of this substance as a cement is susceptible of improvement.

Digitized by Google

PLATE 16.

Exhibits rules for finding a section of the raking mould to intersect the horizontal moulding, at any angle of elevation, for right-angled buildings. Also for finding a section of the raking moulding for the gable, placed at any intermediate point, diverging from the straight line to a right angle.

To find a section of the raking moulding to intersect the horizontal moulding for right-angled buildings. At Fig. 1, the plan and elevation of the gable are given. Also the horizontal and raking moulds required to intersect each other when in position. The rules for drawing and transferring the distances to form the raking moulding at B, Fig. 1, are simple geometrical operations which the workman will find no difficulty in comprehending.

To find the raking mould for the gable placed on the diverging lines 1, 2, 3, etc. Produce B S to C equal to S E. Divide the quadrant F H into any number of parts. Extend the line D F, Fig. 1, to G, equal to the development of the arc F H. Produce the lines E S and G H, to intersect each other: from the point of intersection draw the radiating lines 11, 22, etc.; join G E; parallel to G E, draw lines from the points 1, 2, 3, etc., to intersect the line E F: from the points of intersection, draw lines parallel to E D, cutting the line F D at the points 1, 2, 3, etc.; join S 1, S 2, etc. Then the line S 1 is the angle of elevation from which to draw the raking mould for the gable S D E, Fig. 1, placed on the diverging line S J, Fig. 2. The angle of elevation from which to draw the raking mould for the gable S D E, placed on any of the diverging lines, is found at the corresponding figures on the line F D, Fig. 1.

NOTE.—If the horizontal moulding were continued in the straight line S H, though elevated to the angle of the gable, it would not require a change of form. But if the elevated line were to diverge from the straight line, it would begin to form the right angle, and consequently commence to change its form from the horizontal to the raking mould required for the right angle.

FIGURE 3.—To find a veneer for a Gothic head-jamb splayed alike all around. Produce the splay from B to A, the radius to describe the veneer required to cover the circular jamb.

Digitized by Google

Fig. 1.

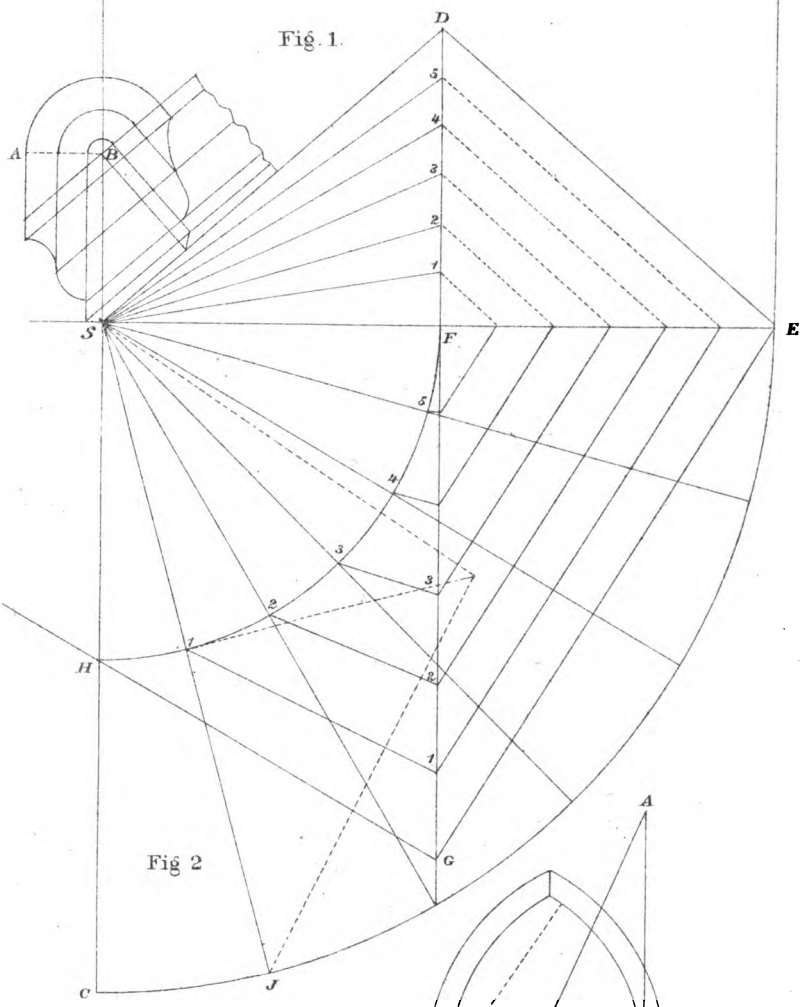

Fig 2

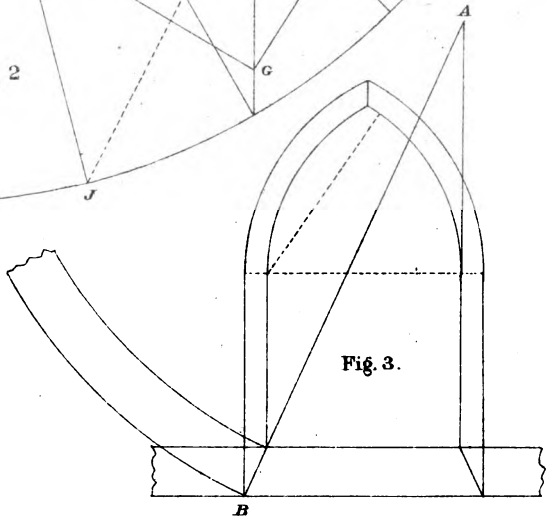

Fig. 3.

Digitized by Google

Digitized by Google

METRIC SYSTEM OF WEIGHTS AND MEASURES.

Act of Congress authorizing the decimal system of our weights and measures:

1. It shall be lawful, throughout the United States of America, to employ the weights and measures of the Metric System; and no contract or dealing, or pleading in any court, shall be deemed invalid or liable to objection, because the weights or measures expressed or referred to therein, are weights or measures of the Metric System.

2. The tables in the schedules hereto annexed, shall be recognized in the construction of contracts, and in all legal proceedings, as establishing, in terms of the weights and measures now in use in the United States, the equivalents of the weights and measures expressed therein in terms of the Metric System: and said tables may be lawfully used for computing, determining and expressing, in customary weights and measures, the weights and measures of the Metric System.

WEIGHTS.

METRIC NAME.	FRENCH VALUE—METRICAL. Grams.	Measure of water at max. density.	AMERICAN EQUIVALENT. Avoir.
Millier, (or Tonneau,)	1,000,000	1 cubic meter,	2204.6 pounds.
Quintal,	100,000	1 hectoliter,	220.46 "
Myriagram,	10,000	10 liters,	22.046 "
Kilogram, (or Kilo,)	1,000	1 liter,	2.2046 "
Hectogram,	100	1 deciliter,	3.5274 ounces.
Dekagram,	10	10 cubic centimeters,	0.3527 "
GRAM, (French, Gramme).	1	1 cubic centimeter,	15.432 grains.
Decigram,	1-10th	1-10th " "	1.5432 "
Centigram,	1-100th	10 cubic millimeters,	0.1543 "
Milligram,	1-1000th	1 " "	0.0154 "

LONG MEASURE.

METRIC NAME AND VALUE.		AMERICAN EQUIVALENT.
Myriameter,	10,000 meters,	6.2137 miles.
Kilometer,	1,000 "	0.62137 "
Hectometer,	100 "	328 feet 1 inch.
Dekameter,	10 "	393.7 inches.
METER,	1 "	39.37 "
Decimeter,	1-10th "	3.937 "
Centimeter,	1-100th "	0.3937 "
Millimeter,	1-1000th "	0.0394 "

SQUARE OR SURFACE MEASURE.

METRIC NAME AND VALUE.		AMERICAN EQUIVALENT.
Hectare,	10,000 square meters,	2.471 acres.
ARE,	100 " "	119.6 square yards.
Centiare,	1 " "	1550 square inches.

Digitized by Google

PLATE 17.

Exhibits rules for finding the lines to cut the sides and edges of a piece placed at a given angle oblique to the base.— To miter over right, acute and obtuse angles.

Draw the acute angle A B C, Fig. 1 ; join B D the line of intersection; draw I J, the pitch required. At right angles to I J draw I A; from the point I as centre, with I J and I A as radii, describe the arcs J K and A G; tangent to the arcs, draw lines parallel to A B, indefinitely; from the point B draw a line at right angles to A B, cutting the tangents in L and H ; join L D and H D, the angles required. The bevel for the sides of the piece is shown at H ; for the edges of the piece, at L.

Figures 2 and 3 are examples of obtuse and right-angled figures; the operation of finding the angles for the bevels is the same. Fig. 4 represents the rule for finding the lines for a butt joint. The bevel to be applied at right angles to the lines on the sides of the piece.

Digitized by Google

Fig. 1.

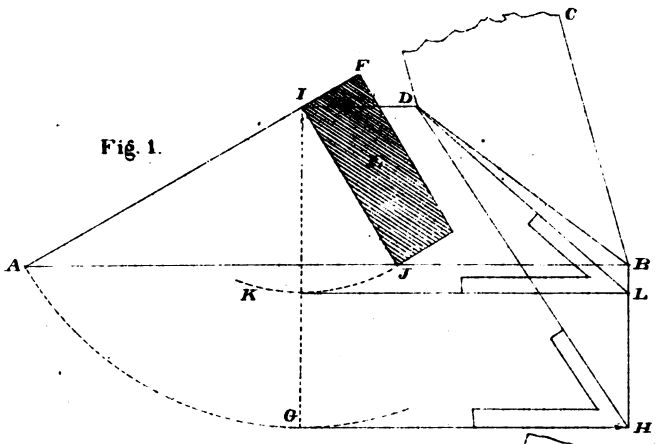

Fig. 2.

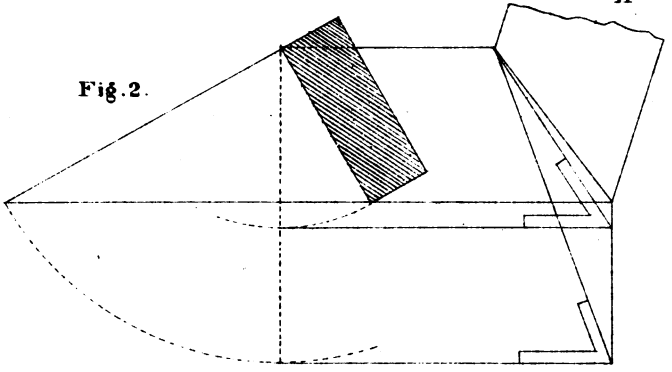

Fig. 3.

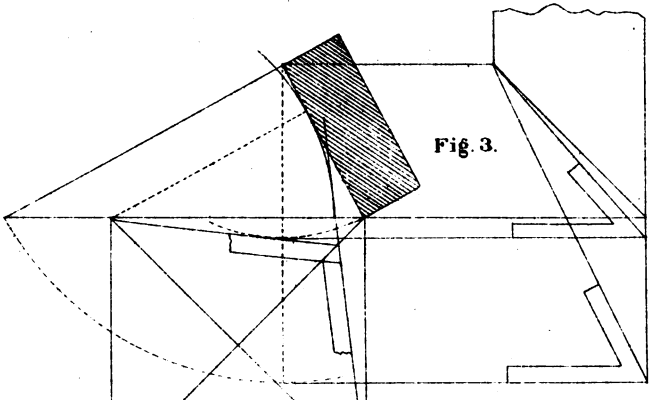

Fig. 4.

Digitized by Google

Digitized by Google

CUBIC MEASURE OR CAPACITY.

METRIC NAME AND VALUE.			AMERICAN EQUIVALENT.	
Liters.	Cubic Measure.		Dry Measure.	Liquid or Wine Measure.
Kiloliter, (or Stere,)	1,000	1 cubic meter,	1.308 cu. yds.	264.17 gallons.
Hectoliter,	100	1-10th " "	2 bu. 3.35 pks.	26.41 "
Dekaliter,	10	10 cu. decimeters,	9.08 quarts	2.6417 "
LITER,	1	" "	0.908 "	1.0567 quarts.
Deciliter	1-10th	1-10th " "	6.1022 cu. in.	0.845 gills.
Centiliter,	1-100th	10 cu. centimeters,	0.6102 " "	0.338 fl. ounces.
Milliliter	1-1000th	1 " "	0.061 " "	0.27 fl. drams.

FACTS WORTH REMEMBERING.—One thousand shingles, laid four inches to the weather, will cover one hundred square feet of surface; and five pounds of shingle nails will fasten them on.

One-fifth more siding and flooring is needed than the number of square feet of surface to be covered, because of the lap in the siding and matching of the floor.

One thousand laths will cover seventy yards of surface, and eleven pounds of lath nails will nail them on.

Eight bushels of good lime, sixteen bushels of sand and one bushel of hair, will make enough good mortar to plaster one hundred square yards.

A cord of stone, three bushels of lime and a cubic yard of sand, will lay one hundred cubic feet of wall.

Five courses of brick will lay one foot in height on a chimney; six bricks in a course will make a flue four inches wide and twelve inches long; and eight bricks in a course will make a flue eight inches wide and sixteen inches long.

PROTECTION AGAINST RUST.

For farm implements of all kinds, having metal surfaces exposed, for knives and forks, and other household apparatus,—indeed, for all metals likely to be injured by oxidation, or "rusting," the application furnished to the American Agriculturist by the late Professor Olmstead, author of "Olmstead's Natural Philosophy," etc., is most highly recommended. He used it on air-pumps, telescopes, and various other apparatus:—Take any quantity of good lard, and, to every pound or so, add of common resin ("rosin") an amount about equal to half the size of an egg, or less—a little more or less is of no consequence. Melt them slowly together, stirring as they cool. Apply this with a cloth, or otherwise, just enough to give a thin coating to the metal surface to be protected. It can be wiped off nearly clean from surfaces where it will be undesirable, as in the case of knives and forks, etc. The resin prevents rancidity, and the mixture obviates the ready access of air and moisture. A fresh application may be needed when the coating is washed off by the friction of beating storms, or otherwise. There was talk of patenting this recipe, at one time, but Prof. Olmstead decided to publish it for the general good.

Digitized by Google

PLATE 18.

FIGURE 1.—*Represents the geometrical operation of finding the curve and length of the body or side of a circular pan. Also the side of a square pan the content of which shall be equal to the content of the circular pan.*

To find the side of a square pan. From the point F as centre, with the radius of the circle, describe an arc cutting the circle at H: from the point H as centre, with H S as radius, describe an arc cutting the circle at J; draw J R parallel to D F, and R P at right angles to G F; join G P, the side required. The angle for the joints is given at A.

To find the curve required for the body of the circular pan, produce the sides C A and D B to intersect at E: from the point of intersection, describe arcs from D and B, indefinitely. To find the length of the body, join P L: then from the point D as centre, with P L as radius, describe an arc cutting the curve at N, one-fourth of the length required.*

FIGURE 2.—Represents three circles, and three inscribed squares. The second square equals half the area of the first; the third square equals one-fourth the area of the first square. The same rule applies to the circles. An inspection of the figure is sufficient for its comprehension.

FIGURE 3.—Shows a practical rule for finding the bevels for mitering pieces placed oblique to the base.

Draw A B the angle required; at right angles to A B, draw B C: from the points A and C as centres, describe the arcs B D and B E; tangent to the arcs, draw D S and E H; join A S and C H. The bevel for the face A B is shown at S; the bevel for the edge is shown at H. If butt joints at the angles are required, join A H for the bevel at A.

* Add all necessary material for edges and seams.

Digitized by Google

Fig. 1

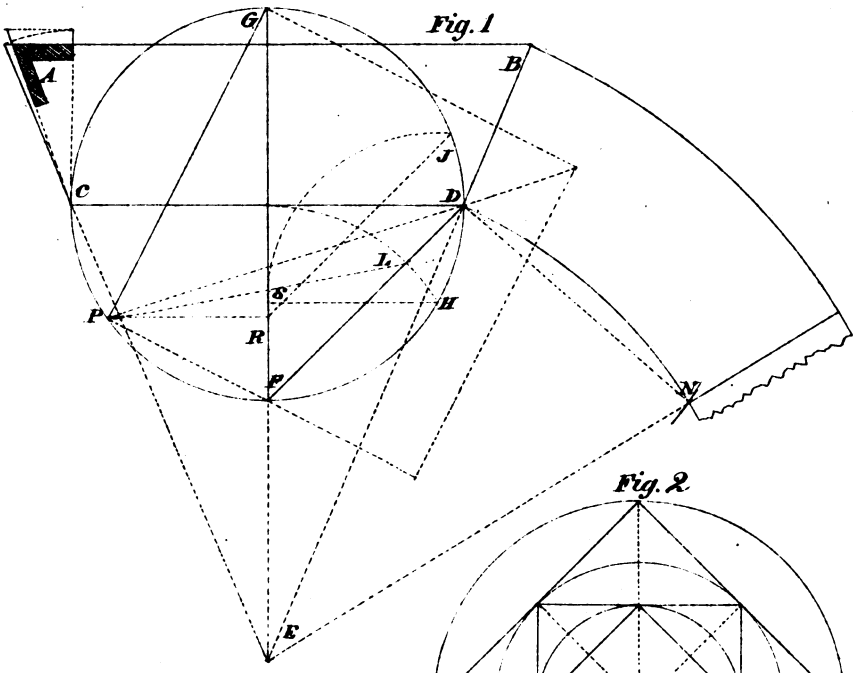

Fig. 2

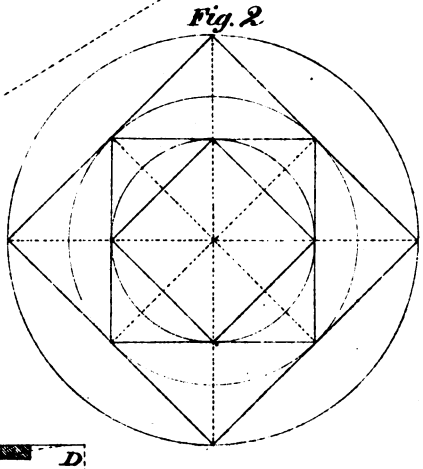

Fig. 3

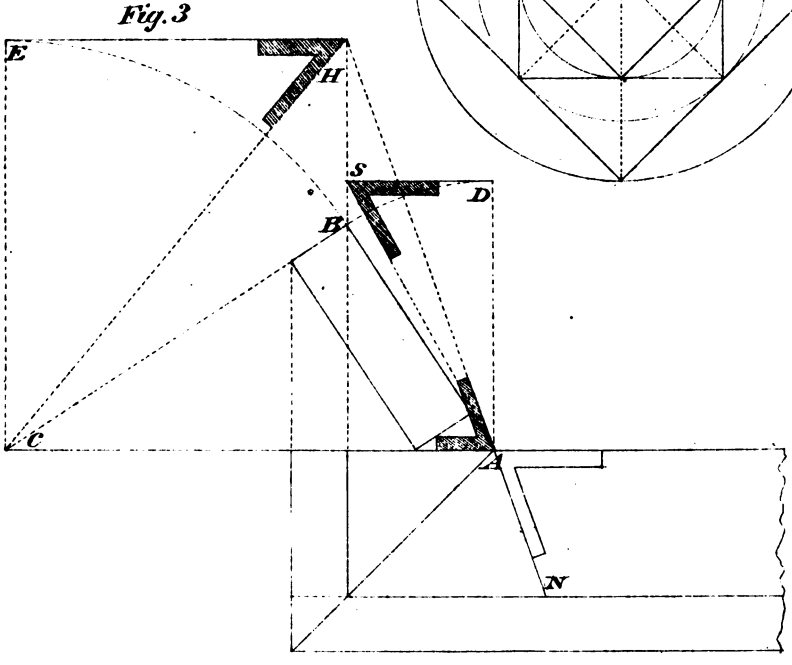

Digitized by Google

Digitized by Google

VARIOUS WOODS.

The following are interesting items concerning the commercial value and properties of the better known woods, as laid down by the *American Builder*.

Elasticity: Ash, hickory, hazel, lancewood, chestnut (small), yew, snakewood.

Elasticity and Toughness: Oak, beech, elm, lignum-vitæ, walnut, hornbeam.

Even Grain (for carving and engraving): Pear, pine, box, lime-tree.

Durability (in dry works): Cedar, oak, yellow pine, chestnut.

Building (ship-building) : Cedar, pine, (deal,) fir, larch, elm, oak, locust, teak.

Wet construction (as piles, foundations, flumes, etc.): Elm, alden, beech, oak, whitewood, chestnut, ash, spruce, sycamore.

Machinery and Millwork (frames): Ash, beech, birch, pine, elm, oak. Rollers, etc : Box, lignum-vitæ, mahogany. Teeth of wheels: Crab-tree, hornbeam, locust. Foundry patterns: Alden, pine, mahogany.

Furniture (common): Beech, birch, cedar, cherry, pine, whitewood. Best furniture : Amboyna, walnut, oak, rosewood, satinwood, sandalwood, chestnut, cedar, tulip-wood, zebra-wood, ebony.

Of these varieties, those that chiefly enter into commerce in this country are oak, hickory, ash, elm, cedar, black-walnut, maple-cherry, butternut, etc.

To Measure Grain Bins.—A cubical box 12⅞ inches each way will hold a bushel. Hence, to ascertain the contents of a bin, take a stick or rule 12⅞ inches long, and divide it by marks into tenths and hundredths. Measure the length, breadth and depth with this rule; multiply the three dimensions together, and the product will be bushels. This is the most convenient and easiest method known. Use the rule as though it were feet and inches. Suppose, for example, a bin measures 8.5 in length, 5.7 in width, and 4.9 in depth. The product of these is 237.405, or about 237.4 bushels. Every farmer should make such a rule, and use it in all cases where the contents of bins or boxes are required.

It is a common thing when a screw or staple becomes loose, to draw it out, plug up the hole with wood, and re-insert it. It has been found that a much better way is to fill up the holes tightly with cork. Screws and irons so secured are said to remain perfectly tight as long as when put into new wood.

To find the length when the width is given, to contain a given number of square feet. For example : required the length of a piece 32 inches wide, to contain 8 square feet. $8 \times 12 = 96 \times 12 = 1152 \div .32 = 36$ inches, the length required.

A weight of 36,000 pounds attached to a bar of iron, one inch square and 1,000 inches in length will draw it out one inch ; 45,000 pounds will stretch it two inches; 54,000 pounds, four inches ; 63,000 pounds, eight inches, and 72,000 pounds, sixteen inches, when it will finally break.

Digitized by Google

PLATE 19.

Exhibits the plan and elevation of a circular desk. Also the plan and elevation of a circular seat.

FIGURES 1, 2.—Represent the plan and elevation of the circular desk. To find the radii of the arcs required for the ribs to form the drum, to bend the circular inclining top, A B C D, Fig 2. Draw G H, the angle shown on the elevation, Fig. 1. Square over from I to L; also from H to M. From the points L and M as centres, describe arcs touching the line G H; tangent to the arcs, and at right angles to G H, draw N J and R K, the radii required. To find the centres from which to describe the ribs. From the points A and B as centres, with R K as radius, describe arcs cutting each other at P, the centre required; from which describe the arc A S B for the rib placed over the chord A B. The rib placed over the chord C D is found in the same manner. The ribs will require beveling at the points of contact, A, B.

FIGURE 3.—Represents the piece required for the circular inclining top. The radii to describe the outside and inside curves are taken from G I and G H, Fig. 2. The radiated lines shown on the piece are grooves for the keys required to shape the piece.

FIGURES 4, 5.—Exhibit the plan and elevation of a circular seat with an inclining back. The rules for finding the radii to describe the seat and back pieces, placed parallel to each other when in position, are the same as those used for finding the veneer for a Gothic head-jamb, splayed alike all around.

Digitized by Google

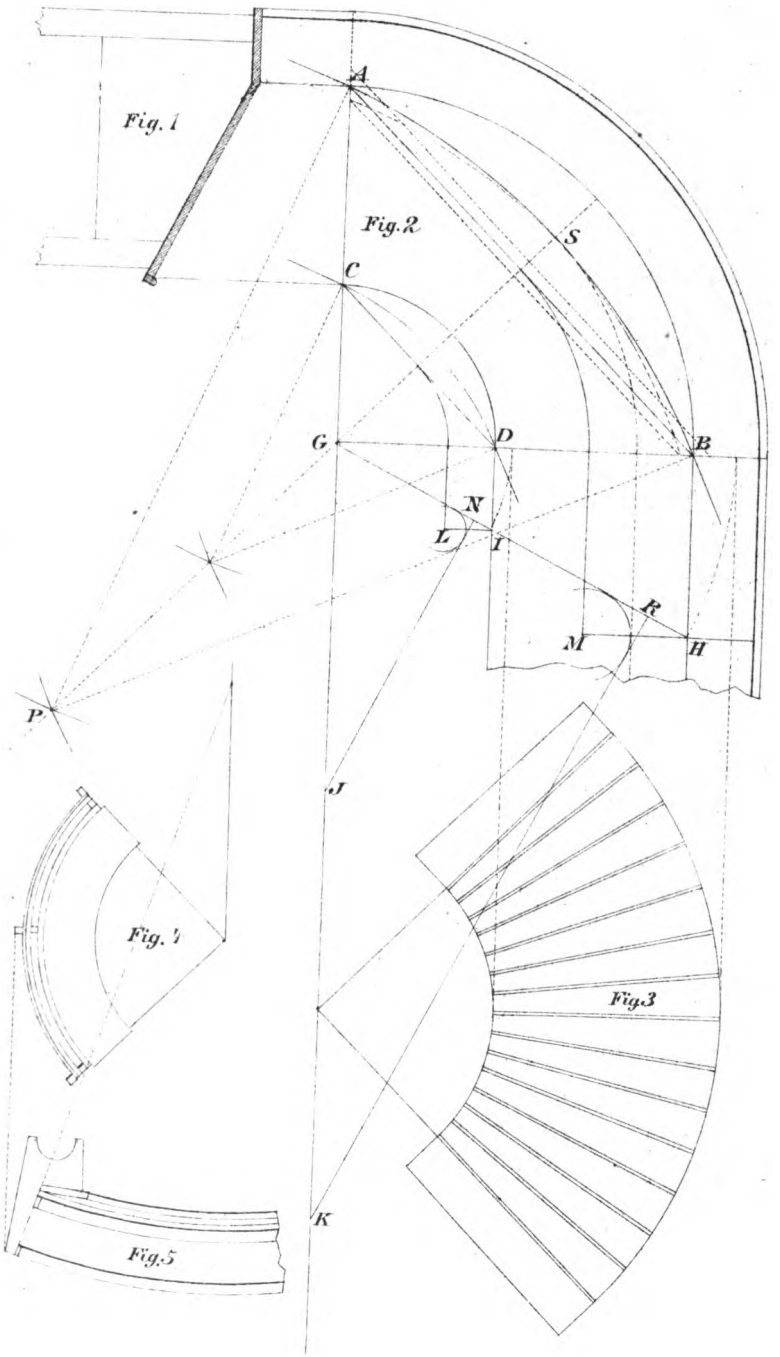

Digitized by Google

Digitized by Google

MISCELLANEOUS NOTES & RULES.

The greatest force produced by the wind on a vertical wall is equal to 40 lbs. to the square foot.

When a summer or beam has settled one-fortieth of its length, it is liable to break.

Laths for plastering will lay 48 feet to the bundle, equal to $5\frac{1}{3}$ square yards.

One barrel of lime to one cubic yard of sand, will plaster 17 square yards with two coats.

It requires 14 bricks to lay 1 foot in length and 1 foot in height of an 8 inch wall; 20 bricks for a 12 inch wall, and 27 bricks for a 16 inch wall.

An acre of ground is 208½ feet square, and contains 43,560 square feet.

In water, sound passes 4,766 feet per second; in air, 1,146 feet per second.

A Winchester bushel is 18½ inches in diameter, 8 inches deep, and contains $2150\frac{3}{8}$ cubic inches.

A box 16×16 inches square, $8\frac{3}{8}$ inches deep, will hold a bushel.

A box 12×12 inches square, 7½ inches deep, will hold half bushel.

A box 9×9 inches square, $6\frac{5}{8}$ inches deep, will hold one peck.

A box 7×7 inches square, 5½ inches deep, will hold 4 qts., or half peck.

A pile of wood 8 feet long, 4 feet wide and 4 feet high, contains 1 cord=to 128 cubic feet.

A cistern 5 feet diameter, and 6 feet deep, will hold 30 barrels, of 32 gallons each.

A cistern 6 feet diameter, and 6 feet deep, will hold 39 barrels.

A cistern 7 feet diameter, and 6 feet deep, will hold 54 barrels.

Digitized by Google

PLATE 20.

Exhibits the operation of finding the angle rafter for French Roofs.

The plan and elevation of the common rafters are shown at Figs. 1 and 2. To find the major and minor axes of the elliptic curve required for the angle rafter A B, Fig 1. Draw A D at right angles to A B, equal to S H, Fig. 2; from the point D draw a line parallel to A B, indefinitely. Through the point P draw C R parallel to D A, equal to P B; then C D equals half of the major axis, and C R equals half of the minor axis, of the elliptic curve required. To find the points for the pins, to describe the elliptic curve: from the point R as centre, with C D as radius, describe arcs cutting the major axis at 2 and 3, the points required. To form the angle rafter by ordinates, draw any number, 11, 22, etc.; transfer the distances, and through the points trace the elliptic curve required.

FIGURE 3.—Represents a simple and easy rule for finding the section of a semi-cylinder cut at a given angle oblique to the base. From the points A, B, C, on the plan, draw lines at right angles to A C, indefinitely. Draw D E, the angle required; also the oblique angle C F. To find the direction of the major axis, set off from 1 to 2, equal to 3, 4; from the point 2 square up to 5, equal to 3 B; join 1, 5, the minor axis; through the point 1 draw the major axis at right angles to 1, 5, indefinitely. To find the points for the pins, to describe the semi-ellipse: from the point 5 as centre, with 1 D as radius, describe arcs cutting the major axis at 6 and 7, the points required.

Digitized by Google

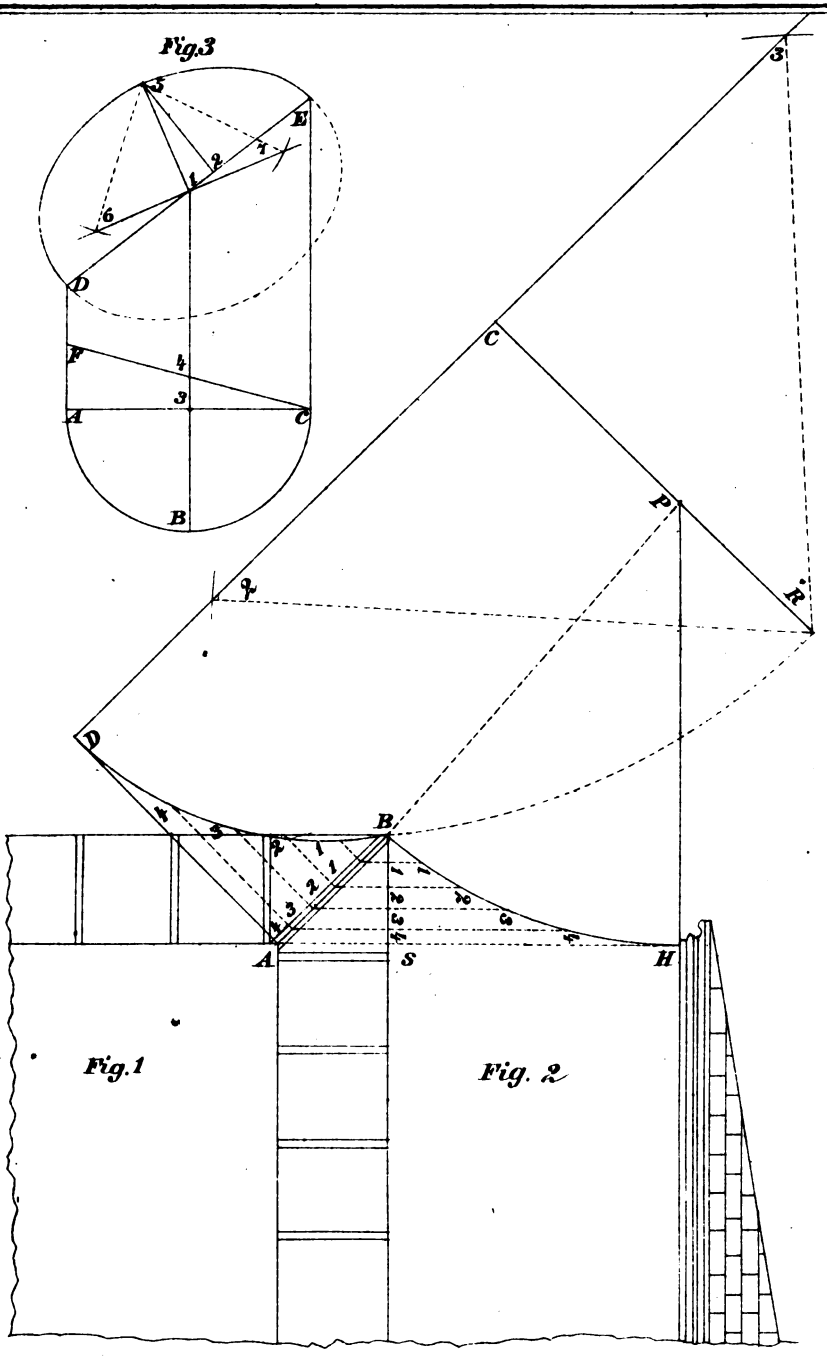

Digitized by Google

Digitized by Google

At the depth of 45 feet the temperature of the earth is uniform throughout the year.

Dimensions of drawings for patents in the United States, 8.5x12 inches.

The lap of slates varies from 2 to 4 inches; the standard is assumed to be 3 inches.

The pitch of a slate roof should not be less than 1 inch in height to 4 inches in length.

According to the last census, there are 2,000 Architects, 350,000 Carpenters, 45,000 Cabinet makers, and 46,000 Carriage makers in the United States.

The strength of a horse is equivalent to that of 5 men: the daily allowance of water for a horse should be 4 gallons.

ELASTICITY AND STRENGTH.—The component parts of a rigid body adhere to each other with a force which is termed *Cohesion.*

Elasticity is the resistance which a body opposes to a change of form.

Strength is the resistance which a body opposes to a permanent separation of its parts.

A horse can draw upon a plank road three times the load that he can upon an ordinary broken-stone or macadamized road.

Digitized by Google

PLATE 21.

Mitring of Circular Mouldings.

Some twenty years have elapsed since I first published the House Carpenter's Assistant, in which rules were given for the mitring of circular mouldings. The idea, I think, originated with me. It being seldom that the workman is required to perform the operation of mitring circular mouldings, yet if he ever should be, a knowledge of the rules here given will make it an agreeable occupation rather than an unpleasant task attended with anxiety and uncertainty.

FIGURE 1.—Represents the rule for finding the centres, from which to describe the intersecting line, and is applicable to all cases.

FIGURE 4.—Shows how nearly impossible it is to accurately perform work of this kind, without the use of the compasses for describing the intersecting lines.

Digitized by Google

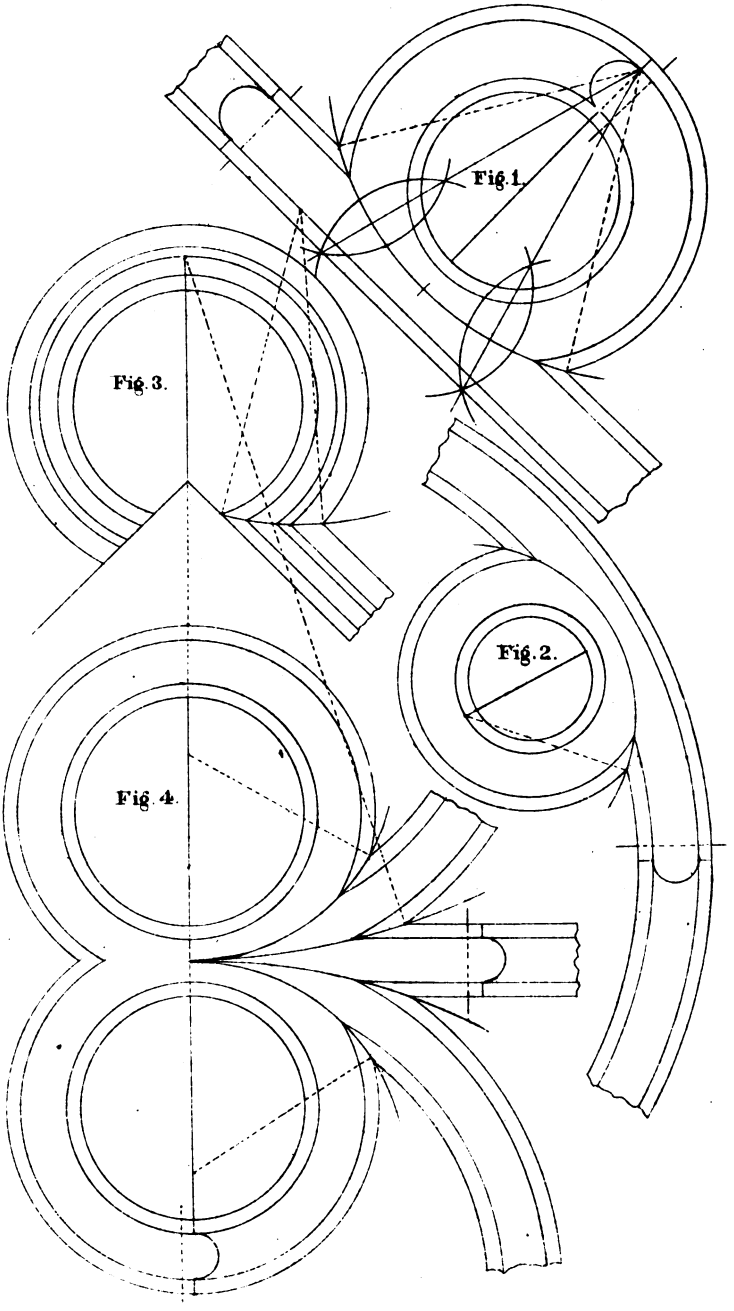

Digitized by Google

Digitized by Google

TERMS USED IN CARPENTRY.

ABUTMENT.—The junction or meeting of two pieces of timber, of which the fibres of one extend perpendicular to the joint, and those of the other parallel to it.

ARRIS.—The line of concourse or meeting of two surfaces.

BACK OF A HAND-RAIL.—The upper side of it.

BACK OF A HIP.—The upper edge of a rafter, between the two sides of a hipped roof, formed to an angle, so as to range with the rafters on each side of it.

BACK-SHUTTERS OR BACK-FLAPS.—Additional breadths, hinged to the front shutters, for covering the aperture completely when required to be shut.

BACK OF A WINDOW.—The board, or wainscoting between the sash-frame and the floor, uniting with the two elbows, and forming part of the finish of a room. When framed, it has commonly a single panel, with mouldings on the framing, corresponding with the doors, shutters, etc., in the apartment in which it is fixed.

BASIL.—The sloping edge of a chisel, or of the iron of a plane.

BATTEN.—A scantling of stuff from two inches to seven inches in breadth, and from half an inch to one inch and a half in thickness.

BAULK.—A piece of fir or deal, from four to ten inches square, being the trunk of a tree of that species of wood, generally brought to a square for the use of building.

BEAD.—A round moulding commonly made upon the edge of a piece of stuff. Of beads there are two kinds: one flush with the surface, called a *quirk-bead*, and the other raised, called a *cock-bead*.

BEAM.—A horizontal timber, used to resist a force or weight: as a *tie-beam*, where it acts as a string or chain by its tension; as a *collar-beam*, where it acts by compression;

Digitized by Google

PLATE 22.

The designs drawn in this plate are given to show what can be done with the saw, a few chisels and the plough, which are all the tools required to construct the sash. Although the bead and rosette, placed in the panels, will add very much to the appearance of the door, the workman requires no sash tools to construct the sash, or moulding planes for the door, such as are necessary to make the common paneled doors and sash now in general use. The sash need not be over one and one-fourth inches in thickness. The splays can be tinted, and when done by an artistic painter present both taste and style in the design; to add to which, the door may be tinted and shaded in three or four colors. The designs here given can be seen in the building now occupied by the author in Newark, N. J.

Digitized by Google

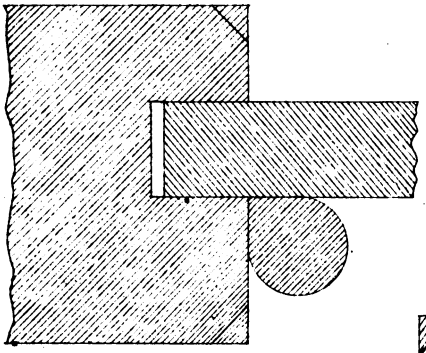

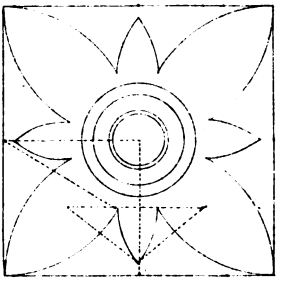

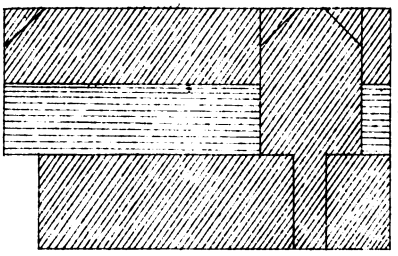

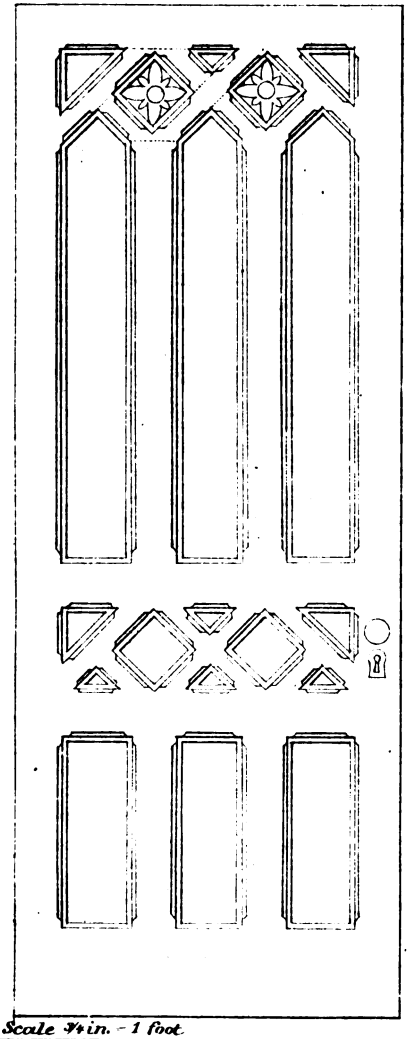

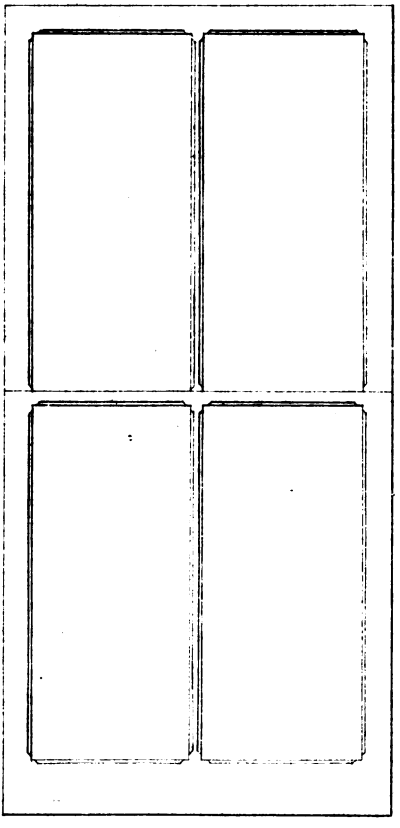

Scale ¾ in. - 1 foot.

Digitized by Google

Digitized by Google

as a *bressummer*, where it resists a transverse insisting weight.

BEARER.—Any thing used by way of support to another.

BEARING.—The distance in which a beam or rafter is suspended in the clear; thus, if a piece of timber rests upon two opposite walls, the span of the void is called the *bearing*, and not the whole length of the timber.

BENCH.—A platform supported on four legs, and used for planing upon, etc.

BEVEL.—One side is said to be *bevelled* with respect to another, when the angle formed by these two sides is greater or less than a right angle.

BIRD'S MOUTH.—An interior angle, formed on the end of a piece of timber, so that it may rest firmly upon the exterior angle of another piece.

BLADE.—Any part of a tool that is broad and thin: as the blade of an axe, of an adze, of a chisel, etc.; but the blade of a saw is generally called a plate.

BLOCKINGS.—Small pieces of wood, fitted in, or glued, or fixed, to the interior angle of two boards or other pieces, in order to give strength to the joint.

BOARD.—A substance of wood contained between two parallel planes: as when the baulk is divided into several pieces by the pit-saw, the pieces are called *boards*. The section of boards is sometimes, however, of a triangular, or rather trapezoidal, form; that is, with one edge very thin; these are called *feather-edge boards*.

BOND-TIMBERS.—Horizontal pieces, built in stone or brick walls, for strengthening them, and securing the battening, lath, plaster, etc.

BOTTOM RAIL.—The lowest rail of a door.

BOXINGS OF A WINDOW.—The two cases, one on each side of a window, into which the shutters are folded.

BRACE.—A piece of slanting timber, used in truss-partitions, or in framed roofs, in order to form a triangle, and thereby rendering the frame immovable; when a brace is used by way of support to a rafter, it is called a *strut*.

Digitized by Google

ORNAMENTAL WORK.

PLATE 23.

Exhibits the method of constructing a Corinthian truss.

A represents the eye of its volute at large, with the centres numbered on which the curves are described. B and C are geometrical views showing the front and side elevation, A careful inspection of which will enable the workman to construct one of any size he may require.

PLASTERER'S WORK.

The *measuring and valuation* of plasterer's work is conducted by surveyors. All common plastering is measured by the yard square, of nine feet; this includes the partitions and ceilings of rooms, stuccoing, internally and externally, etc. etc. Cornices are measured by the foot superficial, girting their members to ascertain their widths, which multiplied by their lengths, will produce the superficial contents. Running measures consist of beads, quirks, arrises, and small mouldings. Ornamental cornices are frequently valued in this way; that is, by the running foot.

The labor in plasterer's work is frequently of more consideration than the materials; hence it becomes requisite to note down the exact time which is consumed in effecting particular portions, so that an adequate and proper value may be put upon the work.

Digitized by Google

The Corinthian Truſs explain'd.

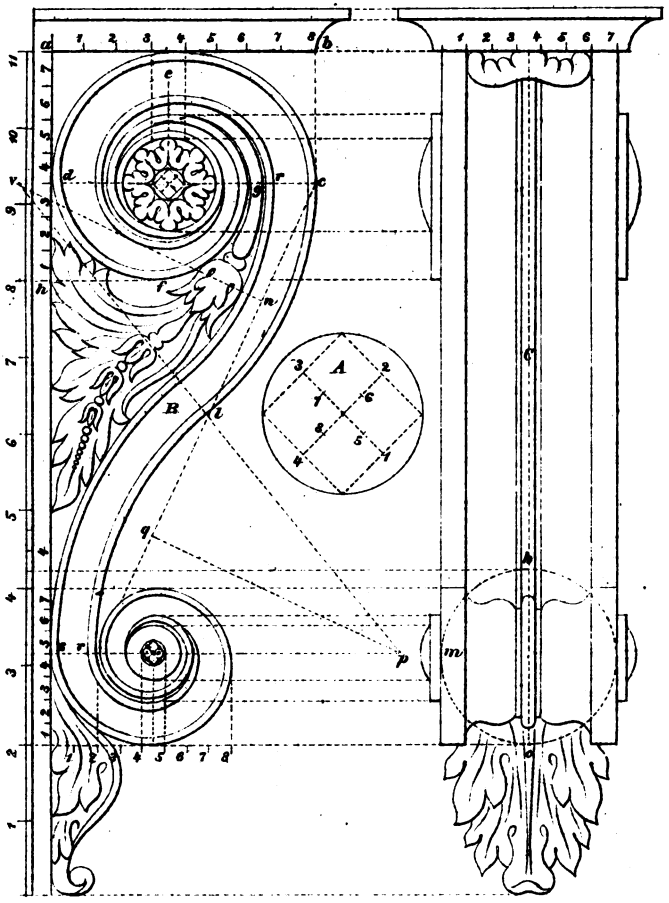

Digitized by Google

Digitized by Google

Braces, in partitions and spanroofs, are always, or should be, disposed in pairs, and placed in opposite directions.

BRACE AND BITS.—The same as *stock and bits*, as explained hereafter.

BRAD.—A small nail, having no head except on one edge. The intention is to drive it within the surface of the wood by means of a hammer and punch, and to fill the cavity flush to the surface with putty.

BREAKING DOWN, in sawing, is dividing the baulk into boards or planks; but, if planks are sawed longitudinally, through their thickness, the saw-way is called a *ripping-cut* and the former a *breaking-cut*.

TO BREAK-IN.—To cut or break a hole in brick-work, with the ripping-chisel, for inserting timber, etc.

BREAKING JOINT.—Is the joint formed by the meeting of several heading joints in one continued line, which is sometimes the case in folded doors.

BRESSUMMER OR BREASTSUMMER.—A beam supporting a superincumbent part of an exterior wall, and running longitudinally below that part.—*See Summer*.

BRIDGED GUTTERS.—Gutters made with boards, supported below with bearers, and covered over with lead.

BRIDGING FLOORS.—Floors in which *bridging joists* are used.

BRIDGING JOISTS.—The smallest joints in naked flooring, for supporting the boarding for walking upon.

BUTTING-JOINT.—The junction formed by the surfaces of two pieces of wood, of which one surface is perpendicular to the fibres, and the other in their direction, or making with them an oblique angle.

CHAMBER.—The convexity of a beam upon the upper edge, in order to prevent its becoming straight or concave by its own weight, or by the burden it may have to sustain, in course of time.

CHAMBER BEAMS.—Those beams used in the flats of truncated roofs, and raised in the middle with an obtuse angle, for discharging the rain-water towards both sides of the roof.

Digitized by Google

PLATE 24.

Exhibits the plan and elevation for a platform stair-case.

To find the point to bore for the first short baluster on the second step. At Fig. 1, place the point of the pitch-board; at B, the centre of the newel post, sett up on the rise from C to A equal to the difference in the heights of the newel post and the short baluster, say six inches. Then the riser intersects the rail at the point required.

To form the face mould for the wreath.

At FIG. 3. place the pitch-board, and draw the pitch line C D; transfer the distances from the plan, Fig. 2, for the width of the mould at the joints. The elliptical curves for the outside and inside of the mould are drawn with a cord or string. The points for the pins are found in the same manner as in plate 1, Fig. 1.

The application of the mould and bevel drawn at Fig. 3, are demonstrated at Fig. 4. The plank sawed square, place the bevel on the joint, and draw the perpendicular line; sett off from the centre of the plank, each way, half the width and thickness of the rail. Apply the mould, and mark the piece for the corners to be removed; the same operation is required for the opposite side. Tack the mould on the side opposite the corners to be removed. Care should be taken to keep the saw or plane perpendicular to the plane of the rail when in position. Remove the surplus wood on the upper and lower sides of the plank and form the wreaths required at Fig. 5. The casing on second floor terminates half the height of the riser above the point to bore for the first baluster on the floor.

Digitized by Google

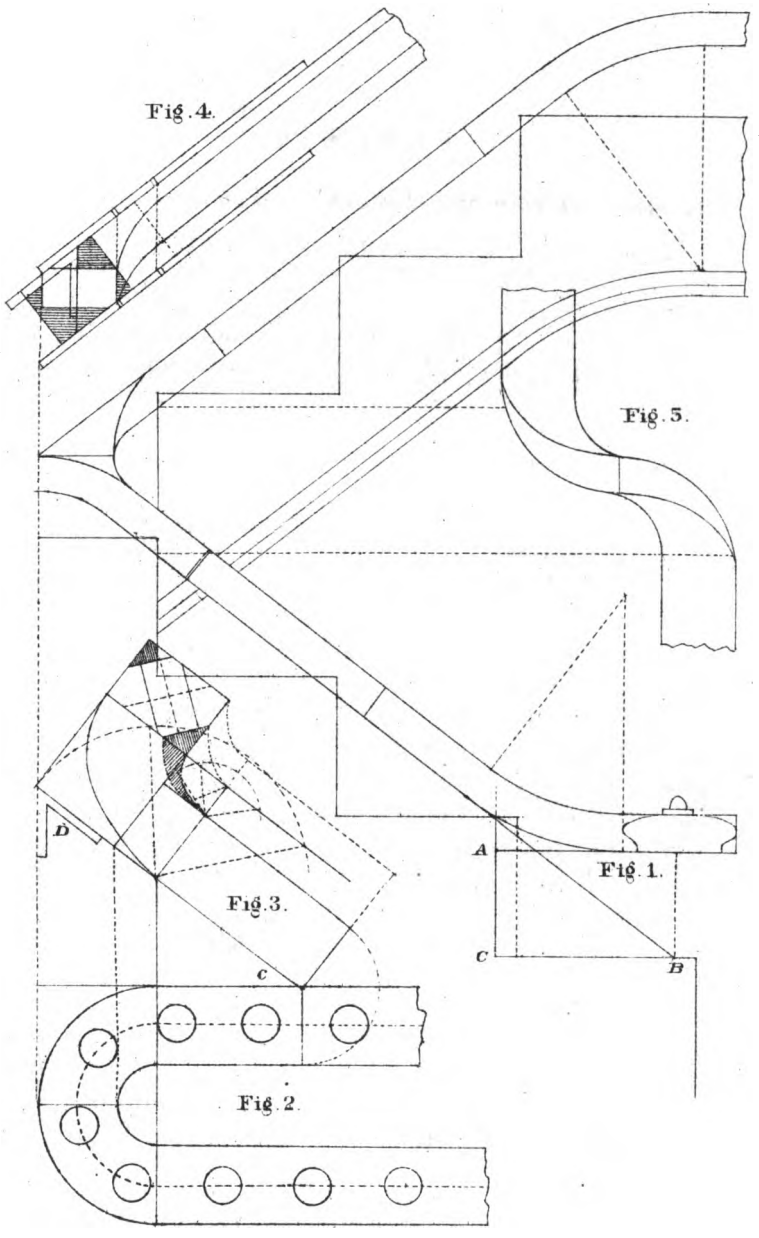

Scale 1 in. = 1 foot.

Digitized by Google

Digitized by Google

CANTALEVERS.—Horizontal rows of timber, projecting at right angles from the naked part of a wall, for sustaining the eaves or other mouldings. Sometimes they are planed on the horizontal and vertical sides, and sometimes the carpentry is rough and cased with joinery.

CARRIAGE OF A STAIR.—The timber-work which supports the steps.

CARCASE OF A BUILDING.—The naked walls and the rough timber-work of the flooring and quarter partitions, before the building is plastered or the floors laid.

CARRY-UP.—A term used among builders or workmen, denoting that the walls, or other parts, are intended to be built to a certain given height: thus, the carpenter will say to the bricklayer, *Carry-up that wall; carry-up that stack of chimneys;* which means, build up that wall or stack of chimneys.

CASTING OR WARPING.—The bending of the surfaces of a piece of wood from their original position, either by the weight of the wood, or by an unequal exposure to the weather or by an unequal texture of the wood.

CHAMFERING.—Cutting the edge of any thing, originally right-angled, aslope or bevelled.

CLAMP.—A piece of wood fixed to the end of a thin board, by mortise and tenon, or by groove and tongue, so that the fibres of the one piece, thus fixed, traverse those of the board, and by this means prevent it from casting: the piece at the end is called a *clamp*, and the board is said to be *clamped.*

CLEAR STORY WINDOWS are those that have no transom.

CROSS-GRAINED STUFF is that which has its fibres running in contrary positions to the surfaces; and, consequently, cannot be made perfectly smooth, when planed in one direction, without turning it or turning the plane.

CROWN-POST.—The middle post of a trussed roof.—*See King-Post.*

Digitized by Google

HAND RAILING.

PLATE 25.

FIGURES 1, 2.—Represent the plans and elevation of a continued hand-rail. At the landing of the first flight, also at the starting of the second flight, care should be taken, in forming the wreath, to rise from the point A to B at the landing, and from C to D at the starting, equal to half the height of the riser. The level rail commences and terminates at the joints; consequently one wreath only will be required for each of the semi-circular parts of the hand-rail. To draw the face mould for the wreaths, proceed in the same manner as described in the preceding plate.

The operation of drawing the mould for the wreaths is precisely the same for large or small cylinders; but, in large openings, it is necessary to place the risers in the cylinders. The rules for finding their exact position for platform stairs are demonstrated at Fig. 3 and Fig. 4, as follows: At Fig. 4, from the point B, draw the pitch lines B D and B E; sett off, above and below, the thickness of the rail. Draw G F, at right angles to the plan, equal to the riser. At Fig. 3, draw the plan of the rail any size, say twelve inches; produce the riser F G from Fig. 4 to H, Fig. 3, cutting the cylinder at the points required. The same rule may be applied at the landing and starting of straight flights, by extending the radius from S to L, and placing the rise the same distance from the centre of the rail as demonstrated by the dotted line and curves at Fig 1. The width of the rail determines the thickness of the plank required for the wreaths.

Digitized by Google

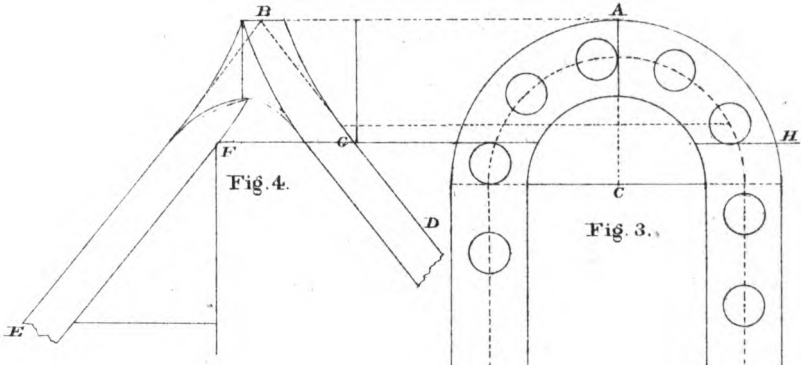

Fig. 4.

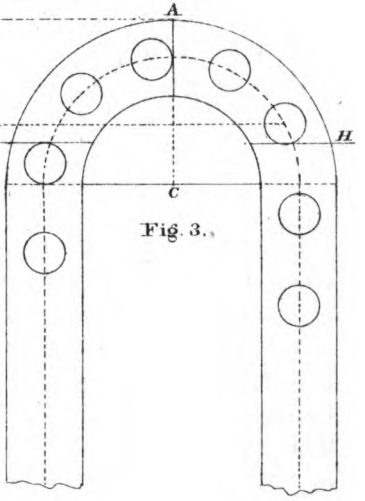

Fig. 3.

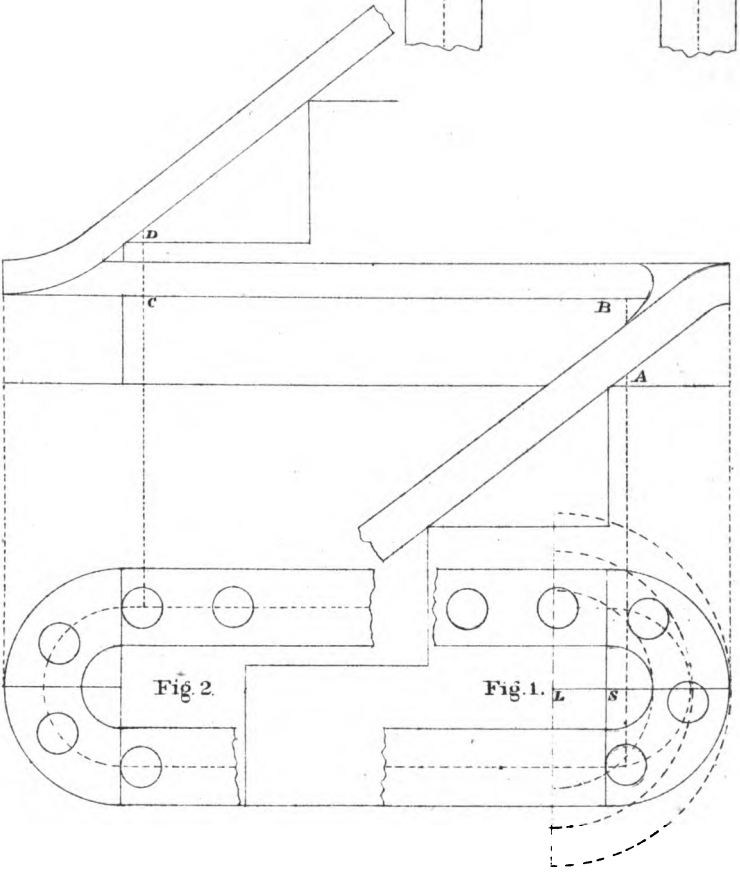

Fig. 2.

Fig. 1.

Scale 1 in. = 1 foot.

Digitized by Google

Digitized by Google

CURLING STUFF.—That which is occasioned by the winding or coiling of the fibres round the boughs of the tree, when they begin to shoot from the trunk.

DEAL TIMBER.—The timber of the fir-tree, as cut into boards, planks, etc., for the use of building.

DISCHARGE.—A post trimmed up under a beam, or part of a building which is weak or overcharged by weight.

DOOR-FRAME.—The surrounding case of a door, into which, and out of which, the door shuts and opens.

DORMER, OR DORMER WINDOW.—A projecting window in the roof of a house; the glass-frame, or casements, being set vertically, and not in the inclined sides of the roofs: thus *dormers* are distinguished from *skylights*, which have their sides inclined to the horizon.

DRAG.—A door is said to *drag* when it rubs on the floor. This arises from the loosening of the hinges, or the settling of the building.

DRAGON-BEAM.—The piece of timber which supports the hip-rafter, and bisects the angle formed by the wall-plates.

DRAGON-PIECE.—A beam bisecting the wall-plate, for receiving the heel or foot of the hip-rafters.

EDGING.—Reducing the edges of ribs or rafters, externally or internally, so as to range in a plane, or in any curved surface required.

ENTER.—When the end of a tenon is put into a mortise, it it is said to *enter* the mortise.

FACE-MOULD.—A mould for drawing the proper figure of a hand-rail on both sides of the plank; so that when cut by a saw, held at a required inclination, the two surfaces of the rail-piece, when laid in the right position, will be everywhere perpendicular to the plan.

FANG.—The narrow part of the iron of any instrument which passes into the stock.

FEATHER-EDGED BOARDS.—Boards, thicker at one edge than the other, and commonly used in the facing of wooden walls, and for the covering of inclined roofs, etc.

Digitized by Google

PLATE 26.

Exhibits the plan for groin arches designed for stone or brick materials.

To form the diagonal ribs resting on the piers C, D, E, F. At Fig. 1, describe the semi-circle A G H; divide the arc A G into any number of equal parts; from the points, draw lines at right angles to A H intersecting the diagonal line I K; from the points of intersection, draw lines at right angles to I K and L M, indefinitely. Transfer the distances 11, 22, etc. from A H; through the points trace the elliptical curves required.

FIGURE 2.—Exhibits the elliptic curve L M drawn with a cord or string.

Digitized by Google

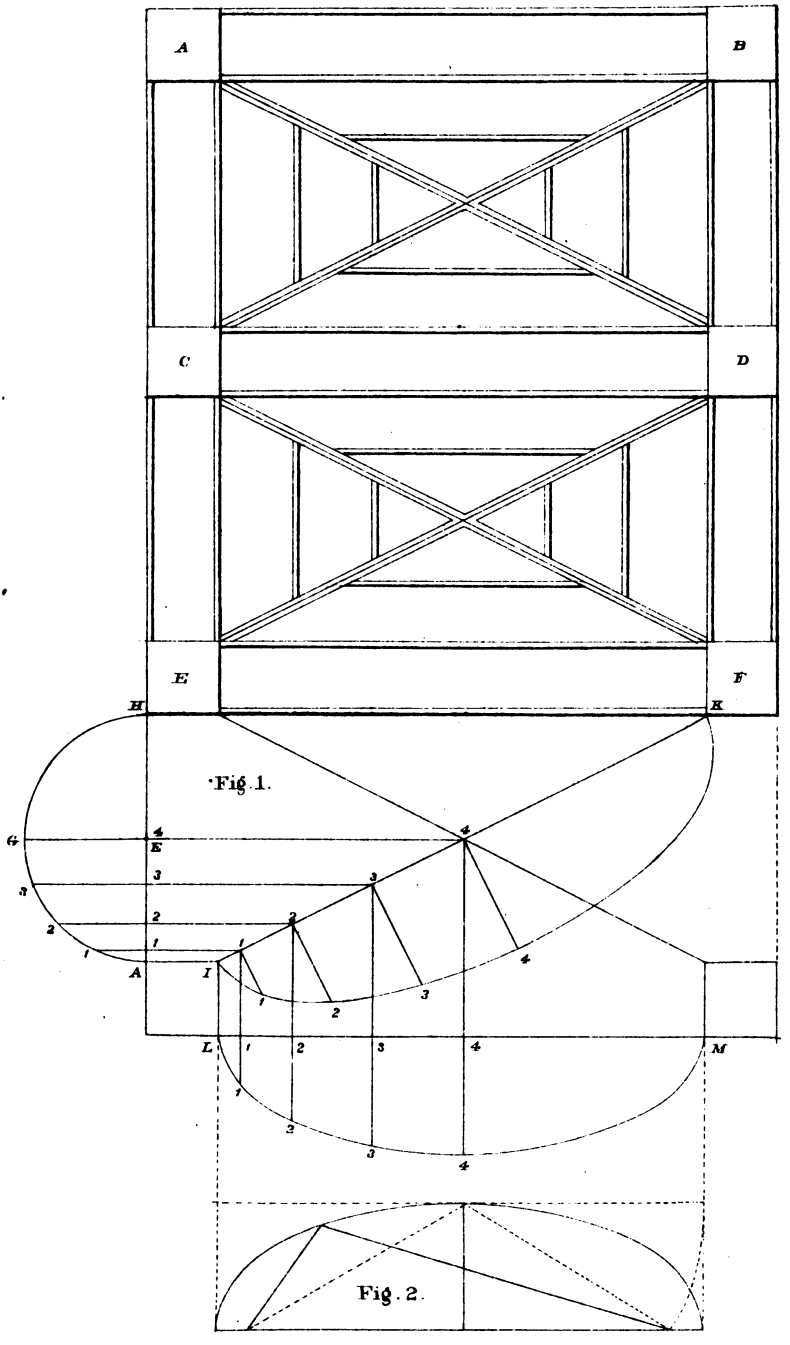

Fig. 1.

Fig. 2.

Digitized by Google

Digitized by Google

FENCE OF A PLANE.—A guard which obliges it to work to a certain horizontal breadth from the arris.

FILLING-IN PIECES.—Short timbers less than the full length; as the jack-rafters of a roof, the puncheons or short quarters, in partitions, between braces and sills, or head-pieces.

FINE-SET.—A plane is said to be fine-set, when the sole of the plane so projects as to take a very thin broad shaving.

FIR POLES.—Small trunks of fir trees, from ten to sixteen feet in length, used in rustic buildings and out-houses.

FREE STUFF.—That timber or stuff which is quite clean, or without knots, and works easily without tearing.

FROWY STUFF.—The same as free stuff.

FURRINGS.—Slips of timber nailed to joists or rafters, in order to bring them to a level, and to range them into a straight surface, when the timbers are sagged, either by casting, or by a set which they have obtained by their weight, in length of time.

GIRDER.—The principal beam in a floor for supporting the binding-joists.

GLUE.—A tenacious viscid matter, which is used as a cement, by carpenters, joiners, etc.

Glues are found to differ very much from each other, in their consistence, color, taste, smell, and solubility. Some will dissolve in cold water, by agitation; while others are soluble only at the point of ebullition. The best glue is generally admitted to be transparent, and of a brown yellow color, without either taste or smell. It is perfectly soluble in water, forming a viscous fluid, which, when dry, preserves its tenacity and transparency in every part; and has solidity, color, and viscidity, in proportion to the age and strength of the animal from which it is produced. To distinguish good glue from bad, it is necessary to hold it between the eye and light; and if it appears of a strong dark brown color, and free from cloudy or black spots, it may be pronounced to be good. The best glue may

Digitized by Google

PLATE 27.

Exhibits a Geometrical demonstration of squaring the circle.

To find the side of a square equal in area to the area of the circle. From the point A as centre, with A D as radius, describe the circle. From the point D as centre, describe the arc A B. From the point B, draw B C at right angles to D T. From the point B as centre, with B C as radius, describe an arc cutting the circle at F. From the point F, parallel to N D, draw a line to intersect the diameter D T, at J; from the point J, draw J S at right angles to D T. Join S T, the side required.

To find the side of a square whose sides shall equal the circumference of the circle. Produce the line J F to L; then T L equals $\frac{1}{4}$ of the circumference, and $\frac{11}{14}$ of the diameter: the side required.

To find the side of a cube, the content of which shall equal the content of a globe or ball. From the point N as centre, with N P as radius, describe an arc cutting the circle at H. Join H T, the side required.

Digitized by Google

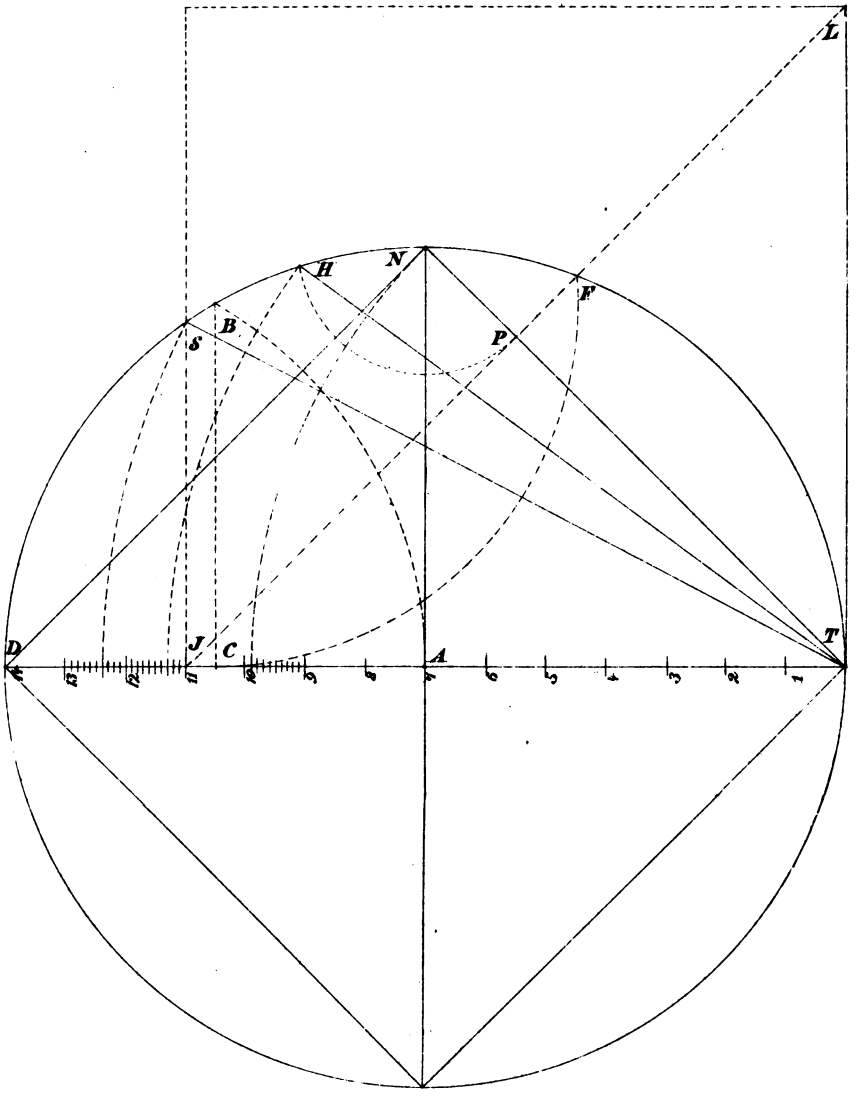

Digitized by Google

Digitized by Google

likewise be known by immersing it in cold water for three or four days, and if it swells considerably without melting, and afterwards regains its former dimensions and properties by being dried, the article is of the best quality.

In preparing glue for use, it should be softened and swelled by steeping it in cold water for a number of hours. It should then be dissolved, by gently boiling it till it is of a proper consistence to be easily brushed over any surface. A portion of water is added to glue, to make it of a proper consistency, which portion may be taken at about a quart of water to half a pound of glue. In order to hinder the glue from being burned during the process of boiling, the vessel containing the glue is generally suspended in another vessel, which is made of copper, and resembles in form a tea-kettle without a spout. This latter vessel contains only water, and alone receives the direct influence of the fire.

A little attention to the following circumstances will tend, in no small degree, to give glue its full effect in uniting perfectly two pieces of wood: first, that the glue be thoroughly melted, and used while boiling hot; secondly, that the wood be perfectly dry and warm; and, lastly, that the surfaces to be united should be covered only with a thin coat of glue, and after having been strongly pressed together, left in a moderately warm situation, till the glue is completely dry. When it so happens that the face of surfaces to be glued cannot be conveniently compressed together in any great degree, they should, as soon as besmeared with the glue, be rubbed lengthwise, one on the other, several times, in order thereby to settle them close. When all the above circumstances cannot be combined in the same operation, the hotness of the glue and dryness of the wood should, at all events, be attended to.

The qualities of glue are often impaired by frequent meltings. This may be known to be the case when it becomes of a dark and almost black color; its proper

Digitized by Google

color being a light ruddy brown: yet, even then, it may be restored by boiling it over again, refining it, and adding a sufficient quantity of fresh; but the fresh is seldom put into the kettle till what is in it has been purged by a second boiling.

If common glue be melted with the smallest possible quantity of water, and well mixed, by degrees, with linseed oil, rendered dry by boiling it with litharge, a glue may be obtained that will not dissolve in water. By boiling common glue in skimmed milk the same effect may be produced.

A small portion of finely levigated chalk is sometimes added to the common solution of glue in water, to strengthen it and fit it for standing the weather.

A glue that will resist both fire and water may be prepared by mixing a handful of quick-lime with four ounces of linseed oil, thoroughly levigated, and then boiled to a good thickness and kept in the shade, on tin plates, to dry. It may be rendered fit for use by boiling it over a fire like common glue.

GRIND-STONE.—A cylindrical stone, by which, on its being turned round its axis, edge-tools are sharpened, by applying the basil to the convex surface.

GROUND-PLATE OR SILL.—The lowest plate of a wooden building for supporting the principal and other posts.

GROUNDS.—Pieces of wood concealed in a wall, to which the facings or finishings are attached, and having their surfaces flush with the plaster.

HANDSPIKE.—A lever for carrying a beam, or other body, the weights being placed in the middle, and supported at each end by a man.

HANGING STILE.—The stile of a door or shutter to which the hinge is fastened; also, a narrow stile fixed to the jamb on which a door or shutter is frequently hung.

HIP-ROOF.—A roof the ends of which rise immediately from the wall-plate, with the same inclination to the horizon, and its other two sides. The *Backing of a Hip* is

Digitized by Google

the angle made on its upper edge to the range with the two sides or planes of the roof between which it is placed.

HOARDING.—An enclosure of wood about a building, while erecting or repairing.

JACK-RAFTERS.—All those short rafters which meet the hips.

JACK RIBS.—Those short ribs which meet the angle ribs, as in groins, domes, etc.

JACK TIMBER.—A timber shorter than the whole length of other pieces in the same range.

INTER-TIE OR ENTER-TIE.—A horizontal piece of timber, framed between two posts, in order to tie them together.

JOGGLE-PIECE.—A truss post, with shoulders and sockets for abutting and fixing the lower ends of the struts.

JOISTS.—Those beams in a floor which support, or are necessary in the supporting, of the boarding or ceiling; as the *binding*, *bridging*, and *ceiling joists*; girders are, however, to be excepted, as not being joists.

JUFFERS.—Stuff of about four or five inches square, and of several lengths. This term is out of use, though frequently found in old books.

KERF.—The way which a saw makes in dividing a piece of wood into two parts.

KING-POST.—The middle post of a trussed roof, for supporting the tie-beam at the middle and the lower ends of the struts.

KNEE.—A piece of timber cut at an angle, or having grooves to an angle. In hand-railing a *knee* is part of the back, with a convex curvature, and therefore the reverse of a *ramp*, which is hollow on the back, now called over or under easing.

KNOT.—That part of a piece of timber where a branch had issued out of the trunk.

LINING OF A WALL.—A timber boarding, of which the edges are either rebated or grooved and tongued.

LINTELS.—Short beams over the heads of doors and

Digitized by Google

windows, for supporting the inside of an exterior wall; and the super-incumbent part over doors, in brick or stone partitions.

LOWER RAIL.—The rail at the foot of a door next to the floor.

LYING PANEL.—A panel with the fibres of the wood disposed horizontally.

MARGINS OR MARGENTS.—The flat part of the stiles and rails of framed work.

MIDDLE RAIL.—The rail of a door which is upon a level with the hand when hanging freely and bending the joint of the wrist. The lock of the door is generally fixed in this rail.

MITRE.—If two pieces of wood be formed to equal angles, or if the two sides of each piece form an equal inclination, and two sides, one of each piece, be joined together at their common vertex so as to make an angle, or an inclination double that of either piece, they are said to be *mitred* together, and the joint is called the *mitre*.

MORTISE AND TENON.—The tenon, in general, may be taken at about one-third of the thickness of the stuff.

When the mortise and tenon are to lie horizontally, as the juncture will thus be unsupported, the tenon should not be more than one-fifth of the thickness of the stuff; in order that the strain on the upper surface of the tenoned piece may not split off the under cheek of the mortise.

When the piece that is tenoned is not to pass the end of the mortised piece, the tenon should be reduced one-third or one-fourth of its breadth, to prevent the necessity of opening one side of the tenon. As there is always some danger of splitting the end of the piece in which the mortise is made, the end beyond the mortise should, as often as possible, be made considerably longer than it is intended to remain; so that the tenon may be driven tightly in, and the superfluous wood cut off afterwards.

Digitized by Google

But the above regulations may be varied, according as the tenoned or mortised piece is weaker or stronger.

The labor of making deep mortises, in hard wood, may be lessened, by first boring a number of holes with the auger in the part to be mortised, as the compartments between may then more easily be cut away by the chisel.

Before employing the saw to cut the shoulder of a tenon, in neat work, if the line of its entrance be correctly determined by nicking the place with a paring chisel, there will be no danger of the wood being torn at the edges by the saw.

As the neatness and durability of a juncture depend entirely on the sides of the mortise coming exactly in contact with the sides of the tenon; and, as this is not easily performed when a mortise is to pass entirely through a piece of stuff, the space allotted for it should be first of all correctly gauged on both sides. One half is then to be cut from one side, and the other half from the opposite side; and as any irregularities, which may arise from an error in the direction of the chisel, will thus be confined to the middle of the mortise, they will be of very little hindrance to the exact fitting of the sides of the mortise and tenon. Moreover, as the tenon is expanded by wedges after it is driven in, the sides of the mortise may, in a small degree, be inclined towards each other, near the shoulders of the tenon.

MULLION OR MUNNION.—A large vertical bar of a window frame, separating two casements, or glass-frames, from each other.

Vertical *mullions* are called *munnions*; and those which extend horizontally are *transoms*.

MUNTINS OR MONTANTS.—The vertical pieces of the frame of a door between the stiles.

NAKED FLOORING.—The timber-work of a floor for supporting the boarding or ceiling, or both.

NEWEL.—The post, in dog-legged stairs, where the winders terminate, and to which the adjacent string-boards are fixed.

Digitized by Google

OGEE.—A moulding, the transverse section of which consists of two curves of contrary flexure.

PANEL.—A thin board having all its edges inserted in the groove of a surrounding frame.

PITCH OF A ROOF.—The inclination which the sloping sides make with the plane, or level of the wall-plate; or it is the ratio which arises by dividing the span by the height. Thus, if it be asked: What is the pitch of such a roof? the answer is, one-quarter, one-third, or half. When the pitch is half, the roof is a square, which is the highest that is now in use, or that is necessary in practice.

PLANK.—All boards above one inch thick are called *planks*.

PLATE.—A horizontal piece of timber in a wall, generally flush with the inside, for resting the ends of beams, joists or rafters, upon; and, therefore, denominated floor or roof plates.

POSTS.—All upright or vertical pieces of timber whatever; as *truss-posts, door-posts, quarters* in partitions, etc.

BRICK POSTS.—Intermediate posts in a wooden building, framed between principal posts.

PRINCIPAL POSTS.—The corner posts of a wooden building.

PUDLAIES.—Pieces of timber to serve the purpose of hand-spikes.

PUNCHEONS.—Any short post of timber. The small quarterings in a stud partition, above the head of a door, are also called *puncheons*.

PURLINS.—The horizontal timbers in the sides of a roof, for supporting the spars or small rafters.

QUARTERING.—The stud work of a partition.

QUARTERS.—The timbers to be used in stud partitions, bond in walls, etc.

RAFTERS.—All the inclined timbers in the sides of a roof; as *principal rafters, hip rafters, and common rafters*; the latter are called in most countries, *spars*.

RAILS.—The horizontal pieces which contain the tenons

Digitized by Google

in a piece of framing, in which the upper and lower edges of the panels are inserted.

RAISING PLATES OR TOP PLATES.—The plates on which the roof is raised.

RANK-SET.—The edge of the iron of a plane is said to be *rank-set* when it projects considerably below the sole.

RETURN.—In any body with two surfaces, joining each other at an angle, one of the surfaces is said to *return* in respect of the other; or, if standing before one surface, so that the eye may be in a straight line with the other, or nearly so, this last is said to *return*.

RIDGE.—The meeting of the rafters on the vertical angle, or highest part of a roof.

RISERS.—The vertical sides of the steps of stairs.

ROOF.—The covering of a house; but the word is used in carpentry for the wood-work which supports the slating or other covering.

SCANTLING.—The transverse dimensions of a piece of timber; sometimes, also the small timbers in roofing and flooring are called *scantlings*.

SCARFING.—A mode of joining two pieces of timber, by bolting or nailing them transversely together, so that the two appear as one. The joint is called a *scarf*, and timbers are said to be *scarfed*.

SHAKEN STUFF.—Such timber as is rent or split by the heat of the sun, or by the fall of the tree, is said to be *shaken*.

SHINGLES.—Thin pieces of wood used for covering, instead of tiles, etc.

SHREADINGS.—A term not much used at present.

SKIRTINGS OR SKIRTING BOARDS.—The narrow boards around the margin of a floor, forming a plinth for the base of the *dado*, or simply a plinth for the room itself, when there is no dado.

SKIRTS OF A ROOF.—The projecture of the eaves.

SLEEPERS.—Pieces of timber for resting the ground-joists of a floor upon, or for fixing the planking to, in a

Digitized by Google

bad foundation. The term formerly applied to the *valley rafters* of a roof.

SPARS.—A term by which the common rafters of a roof are best known in almost every provincial town in Great Britain; though, generally, called in London *common rafters* in order to distinguish them from the principal rafters.

STAFF.—A piece of wood fixed to the external angle of the two upright sides of a wall, for floating the plaster to, and for defending the angle against accidents.

STILES OF A DOOR are the vertical parts of the framing at the edges of the door.

STRUTS.—Pieces of timber which support the rafters, and which are supported by the truss-post.

SUMMER.—A large beam in a building, either disposed in an outside wall, or in the middle of an apartment, parallel to such wall. When a *summer* is placed under a superincumbent part of an outside wall, it is called a *bressummer*, as it comes in abreast with the front of the building.

SURBASE.—The upper base of a room, or rather the cornice of the pedestal of the room, which serves to finish the dado, and to secure the plaster against accidents from the back of chairs and other furniture on the same level.

TAPER.—The form of a piece of wood which arises from one end of a piece being narrower than the other.

TENON.—*See Mortise.*

TIE.—A piece of timber, placed in any position, and acting as a string or tie, to keep two things together which have a tendency to a more remote distance from each other.

TRANSOM WINDOWS.—Those windows which have horizontal mullions.

TRIMMERS.—Joists into which other joists are framed.

TRIMMING JOISTS.—The two joists into which a trimmer is framed.

TRUNCATED ROOF.—A roof with a flat on the top.

TRUSS.—A frame constructed of several pieces of timber,

Digitized by Google

and divided into two or more triangles by oblique pieces, in order to prevent the possibility of its revolving round any of the angles of the frame.

TRUSSED ROOF.—A roof so constructed within the exterior triangular frame, as to support the principal rafters and the tie-beam at certain given points.

TRUSS-POST.—Any of the posts of a trussed roof, as a *king-post*, *queen-post*, or *side-post*, or posts into which the braces are formed in a trussed partition.

TRUSSELLS.—Four-legged stools for ripping and cross-cutting timber upon.

TUSK.—The bevelled upper shoulder of a tenon, made in order to give strength to the tenon.

UPHERS.—Fir poles, from twenty to forty feet long, and from four to seven inches in diameter, commonly hewn on the sides, so as not to reduce the wane entirely. When slit they are frequently employed in slight roofs, but mostly used whole for scaffolding and ladders

VALLEY RAFTER.—That rafter which is disposed in the internal angle of a roof.

WALL PLATES.—The joint-plates and raising plates.

WEB OF AN IRON.—The board part of it which comes to the sole of the plane.

Digitized by Google

MATHEMATICAL DEMONSTRATION

OF

SQUARING THE CIRCLE.

RULES.

1. Eleven-fourteenths ($\frac{11}{14}$) of the diameter equals one-fourth ($\frac{1}{4}$) of the circumference.

2. *To find the area of the circle.* Multiply the diameter by the radius, and divide the product by 7; the quotient multiplied by 11 gives the area of the circle.

EXAMPLE:

Diameter $28 \times 14 = 392 \div 7 = 56 \times 11 = 616$, area of circle.

3. *To find the side of a square the area of which shall be equal to the area of the circle.* Divide the diameter by 14, multiply the quotient by 11, add to the product one-tenth ($\frac{1}{10}$) of the diameter, and annex the first figure in the quotient.

EXAMPLE:

Diameter $28 \div 14 = 2$.

Product $2 \times 11 = 22$. one-fourth ($\frac{1}{4}$) of the circum.

2.82; one-tenth ($\frac{1}{10}$) of the diameter with quotient annexed.

Side of square equal in area to area of circle. 24.82

Proof: $28 \times 22 = 616$; the square root of which is 24.8193. Add the quotient when it consists of two or more figures.

EXAMPLE:

Diameter $224 \div 14 = 16$

Product $16 \times 11 =$ 176 One-fourth ($\frac{1}{4}$) of the circum.

22.4 One-tenth ($\frac{1}{10}$) of the diam.

16 Quotient added.

Side of square equal in area to area of circle. 198.56

Digitized by Google

Proof: 224×176=39424 the square root of which is 198.5547.

4. Eleven-fourteenths ($\frac{11}{14}$) of the area of the circle equals the area of a square whose sides are equal to the circumference.

5. Seven-elevenths ($\frac{7}{11}$) of the area of the circle equals the area of an inscribed square.

6. One-fourth ($\frac{1}{4}$) of the circumference multiplied by nine (9), the product divided by ten (10), equals the side of an inscribed square, nearly.

7. *To find the diameter when the circumference is given,* Multiply by seven (7) and divide by 22.

8. *To find the diameter when the area of the circle is given.* Divide by fourteen (14), and multiply the quotient by eleven (11); the square root of the product equals one-fourth ($\frac{1}{4}$) of the circumference; to find the diameter proceed as in Rule 7.

These rules give the exact circumference of the circle, where the diameters are 1, 2, 3, 4, etc., multiplied by seven (7), with as much certainty as you can find the root of a rational number, and will be found very useful to workmen.

Digitized by Google

Digitized by Google

Price Reduced, February 1st, 1879.

FROM $5.00 TO $3.00.

HOME BUILDING.

A RELIABLE BOOK OF FACTS

RELATIVE TO

Building, Living, Materials, Costs,

AT ABOUT 400 PLACES FROM

NEW YORK TO SAN FRANCISCO,

CONTAINING

42 Plates and 45 Original Designs of Buildings,

WITH SHORT DESCRIPTIVE SPECIFICATIONS.

Also with extended and elaborated Specifications of Materials and Labor, Merchandise, and where it may be procured; Tables of Costs of Materials at about 400 Places, from the Atlantic to the Pacific;

DESCRIPTIONS AND STATISTICS, FOR 1876, OF

OVER 250 CITIES, TOWNS AND HAMLETS,

How to Reach them, their Hotels, Populations, Healthfulness, Industries, Institutions, Churches, Newspapers, Lots, Farms near and Values, Advantages and Prospects. Places of Resort for Health noted. Many Illustrations, and practical, useful Suggestions.

By E. C. HUSSEY, Architect,

Author of "Hussey's National Cottage Architecture."

Sent, post-paid, on receipt of Three Dollars.

ANNOUNCEMENTS FOR 1879.

NEW BOOKS.

AMES' "ALPHABETS." Containing a large variety of Alphabets, with numerous examples for lettering, architectural designs, maps, etc., together with practical rules for the formation of letters, use of India ink, transferring, etc., making a practical work for the use of architects, engineers, draughtsmen, sign painters, builders, etc., as well as a technical work for the use of schools. Now Ready. 40 plates, oblong 8vo, price.....$1.50

POWELL'S "FOUNDATIONS." Including Treatise on Isolated Piers, by FREDERICK BAUMAN, of Chicago. Showing methods of laying foundations suited to all localities. Ready, June 1, 1879. 8vo, cloth, price.....$1.50

ATWOOD'S "ARCHITECTURAL PROPORTIONS." New, revised and enlarged edition. Ready, October 1, 1879. 8vo, cloth, price.....$1.00

BICKNELL & COMSTOCK, Publishers,

(Formerly A. J. Bicknell & Co.—Established 1865.)

27 Warren Street, New York.

Digitized by Google

ALPHABETICAL PRICE LIST

OF

BOOKS DESCRIBED IN NO. 13.

ILLUSTRATED CATALOGUE

OF

BICKNELL & COMSTOCK,

(Formerly A. J. Bicknell & Co.)

ESTABLISHED 1865.

MAILED TO ANY ADDRESS ON RECEIPT OF TEN CENTS.

	$ c.
American Architect and Building News.....per annum.	6 00
Ames' Alphabets.....	1 50
Applied Mechanics.....	1 00
Art Worker, The..12 Nos...each	1 00
Atwood's Country and Suburban Houses.....	1 50
Atwood's Modern American Homesteads.....	2 50
Atwood's Swiss Gothic Cottage..	10 00
Babcock's Elementary Architecture.....	4 50
Banzer's Monuments.....	8 00
Bell's Carpentry.....	5 00
Bicknell's Cottage and Villa Architecture.....	6 00
Bicknell's Detail, Cottage and Constructive Architecture.....	10 00
Bicknell's Public Buildings.....	3 50
Bicknell's School-House and Church Architecture.....	3 00
Bicknell's Stables, Out-Buildings, Fences, etc.....	2 50
Bicknell's Street, Store and Bank Fronts.....	4 00
Bicknell's Wooden and Brick Buildings, 2 vols.....per vol.	9 00
Bicknell & Co.'s Specimen Book.	1 00
Bicknell's Village Builder, with Supplement.....	1 00
Bicknell's Supplement to Village Builder.....	4 00
Boller's Construction of Iron Bridges.....	2 50
Building Construction.....	1 00
Burns' Drawing Books.....	1 00
Burns' Building Construction, 2 parts.....each	3 50
Burns' Timber and Iron Work...	3 50
Burns' Stone and Brick Work....	3 50
Butler's Ventilation.....	50
Carriage Painter's Manual.....	1 00
Cassell's Technical Manuals..$1 to	2 00
Colling's Art Foliage.....	15 00
Colling's Examples of Mediæval Foliage.....	15 00
Color, Church.....	1 25
Copley's Alphabets.....	3 00
Proff's Progressive American Architecture.....	6 00
Pummings' Architectural Details.	6 00
Davidson, House Painting.....	3 00
Disinfectants and Disinfection...	2 50
Dixon's Pencils.....	
Draining for Profit and Health..	1 50
Drawing for Bricklayers.....	1 50
Drawing for Cabinet-makers....	1 50
Drawings for Carpenters and Joiners.....	1 75
Drawings for Metal-Plate Workers.....	1 50
Drawings for Machinists and Engineers.....	2 00
Drawings for Stonemasons.....	1 50
Drawing Instruments and Materials.....	
Dresser's Principles of Decorative Design.....	3 50
Dresser's Studies in Design.....25	00
Du Bois, Elements of Graphical Statics.....	5 00
Earth-Closets and Sewage.....	50
Eastlake's Hints on Household Taste.....	3 50
Elliott's Book of American Interiors.....	10 00
Esser's Alphabets.....	2 00
Eveleth's School-House Architecture.....	4 00
Evart's House of God.....	1 75
Examples of Modern Architecture	15 00
Fanning, Water Supply.....	6 00
Franke's Monuments.....	9 00
Freehand Drawing.....	50
Fryer, Architectural Iron-Workers' Manual.....	2 50
Gardner, Home Interiors.....	1 50
Gardner, Homes, and How to Make them.....	1 50
Gardner, Illustrated Homes.. ..	1 50
Garrett, House Decoration.....	1 00
Guadard, Bridge Foundations...	50
Gillmore, Building Stones.....	1 00
Gillmore, Roads, Streets and Pavements.....	2 00
Gillmore, Coignet Béton.....	2 50
Gillmore, Limes and Cements...	4 00
Gothic Stone-Work.....	1 50
Gould, American Stair-Builders' Guide.....	3 00
Gould, (New) Carpenters' and Builders' Assistant.....	3 00

Digitized by Google

	$ c.
Greene, Graphical Analysis of Roof Trusses	1 25
Greene, Bridge Trusses	1 50
Griffiths' Ship-Builder	12 00
Guillaume's Interior Architecture	3 50
Gwilt's Encyclopædia of Architecture	20 00
Habitations of Man in all Ages	5 00
Hallett's Specifications	1 75
Hand-Book of Hygiene	3 00
Harney's Barns and Out-Buildings	4 00
Hatfield's American House Carpenter	3 50
Hatfield's Theory of Transverse Strains	5 00
History of a Fortress	5 00
Holly's Church Architecture	10 00
Holly's Modern Dwellings	4 00
Holly, H. W., Carpenters' Hand-Book	75
Holly, H. W., Saw-Filing	75
House Beautiful, The	7 50
How to Paint	1 00
Hussey's National Cottage Architecture	4 00
Hussey's Home Building	3 00
Krusi's Drawing	30, 40 and 75
Lakey, Village and Country Houses	5 00
Leeds' Ventilation	2 50
Lees' Acoustics, Light and Heat	1 50
Liènard, Decoration and Ornamentation of the Nineteenth Century	27 00
Linear Drawing and Practical Geometry	1 00
Loftie, Art in the House	1 00
Loth's Practical Stair-Builder	10 00
Mitchell, Rudimentary Manual of Architecture	5 00
Mitchell, Stepping-Stones to Architecture	60
Model Drawing	1 50
Modern Surface Ornament	6 00
Monckton's National Stair-Builder	5 00
Monckton's National Carpenter and Joiner	5 00
Monumental Books	5 00 to 10 00
Neutral Tint	2 50
Notes on Building Construction	3 50
Orthographic and Isometrical Projection	1 00
Our Workshop	1 00
Palliser's American Cottage Homes	5 00
Parker's Glossary of Architecture	3 75
Peabody, Note-Book Sketches	6 00
Penley, Sketching in Water-Colors	7 50
Plummer, Carpenters and Builders' Guide	1 00
Practical Perspective	1 50
Principles of Ornamental Art	10 00
Purification of Water-Carried Sewage	3 00
Riddell's Lessons on Hand-Railing	5 00
Riddell's Mechanics' Geometry	5 00
Riddell's Carpenter and Joiner	10 00
Riddell's New Elements of Hand-Railing	7 00
Rosengarten's Architectural Style	3 00
Ruskin, Seven Lamps of Architecture	1 75
Ruskin, Poetry of Architecture	1 50
Ruskin, Lectures on Architecture	1 50
Salltzer's Acoustics	2 00
Sanitary Engineering, Latham	3 00
Sanitary Engineering, Denton	10 00
Sanitary Arrangements of Dwellings	2 25
Sanitary Work in Smaller Towns	2 50
Sanitary Condition of Dwellings	50
Sawyer's Fret-Sawing	1 50
Scribner, Mechanics' Companion	1 50
Sepia Painting	2 50
Seymour, Filth, Diseases and Prevention	1 00
Sholl's Catholic Churches	15 00
Sibley's Level	10 00
State Board of Health, Annual Report	3 00
Stevens' Art of House Painting	75
Systematic Drawing and Shading	1 00
Talbert, Gothic Forms	15 00
Talbert, Ancient and Modern Furniture	8 00
Tower, Bridge Builder	2 00
Varin, Architecture of Switzerland	12 00
Village Improvements	75
Viollet-le-Duc, Discourses on Architecture	8 00
Viollet-le-Duc, Story of a House	5 00
Vogde's Pocket Companion	1 50
Warren, Manual of Draughting Instruments	1 25
Water-Color Painting	2 50
Williams' Fret-Sawing	60 c. to 1 00
Withers' Church Architecture	15 00
Wonders of Architecture	1 25
Wood, De Volson, Bridges and Roofs	3 00
Wood, De Volson, Resistance of Materials	3 00
Woodward's Country Homes	1 00
Woodward's National Architect	7 50
Woollett's "Old Homes Made New"	1 50
Woollett's Villas and Cottages	3 00
Workshop, The	7 50
Young Mechanic, The	1 75
Zeriffi, G. G., Historical Development of Art	3 00

Digitized by Google

ANNOUNCEMENT.

WE wish to announce to our patrons that we purpose adding to our business a special department of ARCHITECTURAL DESIGN, and are now prepared to offer our services to all who may require them for the purpose of making Drawings, Specifications, or consultation in regard to any matters pertaining to the construction, ornamentation, sanitary or heating arrangements, of buildings.

Plans, Elevations, Perspective Views, Specifications and Detail Drawings for Cottages, Villas, Churches, School-houses and every description of Public and Private Buildings, furnished at short notice, in the most approved style, and at reasonable rates.

We will also prepare Special Drawings of any of the designs or details in our various publications, with such changes, if any, as may be required to adapt them to individual cases or differences of climate or location; or will furnish new studies, or will work up and complete the rough sketches of builders, giving them their own imprint when desired.

We solicit correspondence from builders and those contemplating building, and all communications will receive prompt and careful attention.

BICKNELL & COMSTOCK,

Formerly A. J. BICKNELL & CO., ESTABLISHED 1865. } *Architectural Designers & Publishers,*

27 WARREN STREET, NEW YORK.

Digitized by Google

Digitized by Google

Digitized by Google

Digitized by Google

Digitized by Google

Digitized by Google

DATE DUE

APR 17 1995
MAY 09 1995
FEB 09 1999
FEB 14 19
DEC 16 1998
JAN 16 1999
MAR 10 2006

DEMCO 38-297

Digitized by Google

TH 5605 G729
The new carpenter's and builder's a
Loeb Design Library APA6344
3 2044 027 087 998

Gould, Lucius D.
The new carpenter's and builder's assistant.
35587

TH
5605
G729

Digitized by Google

Digitized by Google